NEW TECHNOLOGY
INNOVATIVE THINKING
LONG-TERM RELIABLE QUALITY

DUKWON VALVE

53, Mieumsandan 1-ro 15beon-gil, Gangseo-gu, Busan, 46730, Korea
Tel. +82-51-831-9020 Fax. +82-51-831-9019
E-mail. dwvalve@chol.com www.dwvalve.co.kr

1602 Designed by NITODESIGN T.051-343-3845 www.nito.co.kr

*All explanations, specifications and pictures contained in this catalogue are subject to change for product improvement without prior notice.

NEW TECHNOLOGY
INNOVATIVE THINKING
LONG-TERM RELIABLE QUALITY

WWW.DWVALVE.CO.KR

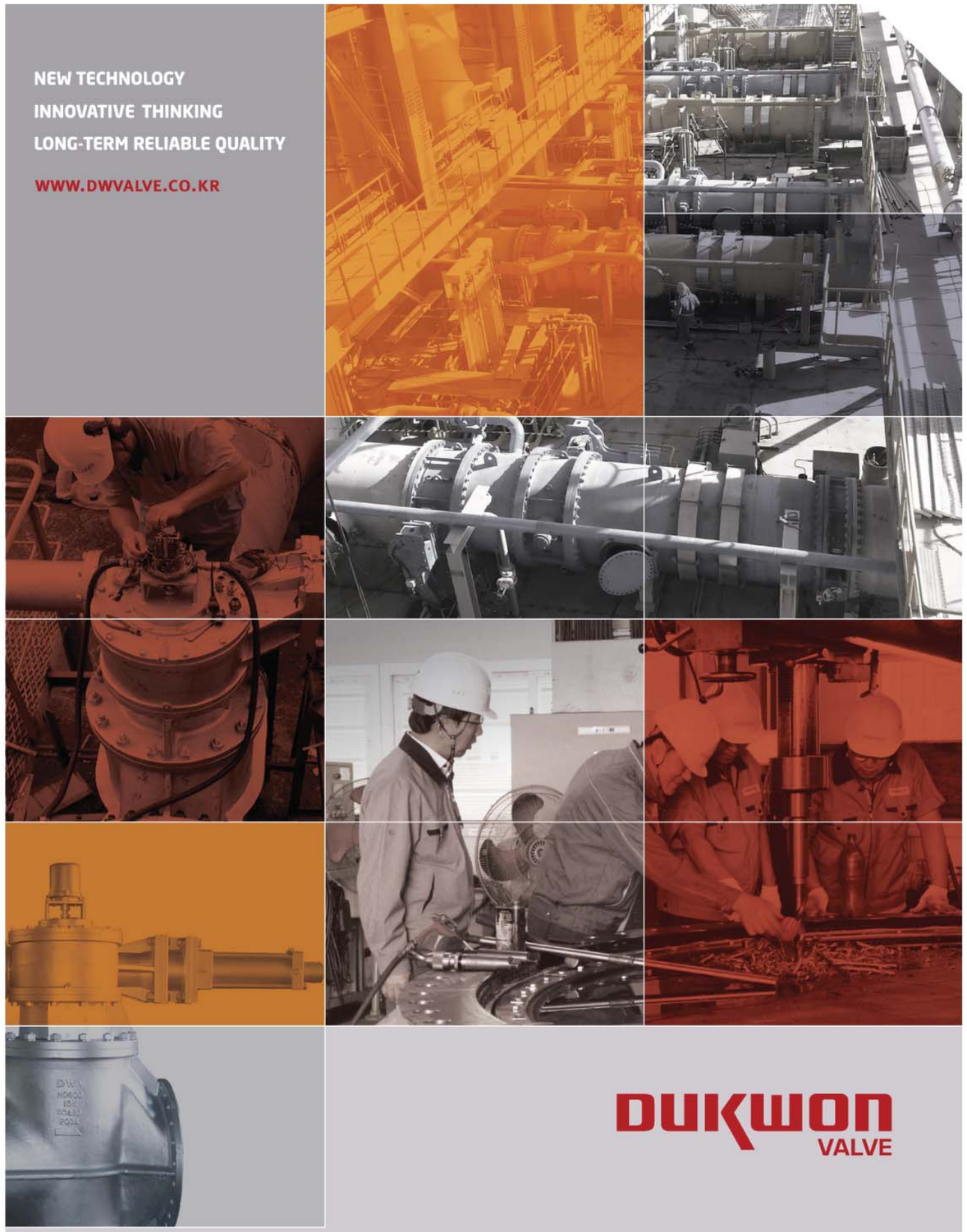

DUKWON VALVE

NEW TECHNOLOGY
INNOVATIVE THINKING
LONG-TERM RELIABLE QUALITY

Since the establishment of Dukwon Valve in 1990, we have strived to improve our technical abilities through continuous R&D, becoming a leader in the field of the manufacture of specialized valves. We produce a comprehensive range of valves, including butterfly valves, check valves, gate valves, water seal valves, pneumatic valves, motorized valves, and more.
Our specialized valves are utilized in a multitude of fields.
Iron Industries, Petrochemical Plants, Power Plants, Desalination Facilities and Shipbuilding all have benefited from our technical expertise and our products. Designed for exacting technical requirements, our products have proven reliability and efficiency in a wide range of applications. A variety of materials allows for tailored construction and complete adaptability to meet our customer's requirements.

DUKWON
VALVE

Dukwon's advanced systematic technology in manufacturing allows for us to provide high quality, economical manufacturing at competitive prices.

Revolutionary improvements in valve technology have set new standards for seal life, tightness and temperature ranges. With our reputation as a leader in our field in mind, we will continue to improve our services offered, our capabilities and quality of our product line.
We desire to be the best valve manufacturing company in the global market.
We will do our utmost to earn the respect and trust of our customers.
We thank you for your interest in our company.

Business Area

- IRON & STEEL INDUSTRY
- OIL & GAS
- PETROCHEMICAL & REFINING
- ENERGY INDUSTRY & ENVIRONMENT PROTECTION
- LNG & CROYOGENICS
- WATER WORKS

HISTORY

1990 ESTABLISHED AS DUKWON VALVE IND.

1991 PRODUCE THE DOUBLE OFFSET BUTTERFLY VALVE, PLUG VALVE FOR STEEL IRON INDUSTRY.

1992 PRODUCE THE METAL SEAT BUTTERFLY VALVE FOR STEEL IRON INDUSTRY AND WATER WORKS.

2000 PRODUCE THE BUTTERFLY VALVE FOR POWER PLANT

2005 MOVED TO 1563-2, SONGJEONG-DONG, GANGSEO-GU, BUSAN

2006 PATNER RELATIONSHIP WITH FINEX 1.5M PROJECT WITH POSCO

2007 DEVELOPED THE CRYOGENIC VALVE

ACQUISITION OF API MONOGRAM (API 609. API 6D)

2009 ACQUISITION OF DNV TYPE APPROVAL

ACQUISITION OF THE KSB2333 CERTIFICATION

VENDOR REGISTRATION (SABIC, SAUDI ARABIA)

2012 MOVED TO 53, MIEUMSANDAN 1-RO 15BEON-GIL, GANGSEO-GU, BUSAN, 47630, KOREA

ACQUISITION OF THE SEMS AND KC CERTIFICATION

VENDOR REGISTRATION (TAKREER, U.A.E)

2013 ACQUISITION OF THE KHNP CERTIFICATION OF REGISTRATION (NUCLEAR POWER PLANT)

2014 ACQUISITION OF FIRE TEST CERTIFICATION FOR BUTTERFLY VALVE

ACQUISITION OF RENEWAL API MONOGRAM (API609, API6D)

2015 CERTIFICATE OF QUALIFICATION RENEWAL (MITSUI, JAPAN)

QUALITY ASSURANCE

With its business philosophy, creativity, specialty, rationality and eco-friendliness, Dukwon has established its perfect quality Assurance system covering receipt of materials, procedures management, and product delivery.

Dukwon valve was acknowledged as ISO9000 (Quality Management System), INNOBIZ and MAINBIZ small and medium business and acquired various certifications on its product and system such as ISO 14001 (Environmental Management System), API Monogram Certification, NEP(New product), NET (New technology) to satisfy customer requirements.
After the establishment of quality policy every year, Dukwon has improved its productivity and quality level based on enterprise-wide quality assurance activities, maximized its profit through cost saving effort and increased its revenue by customer satisfaction. Dukwon will keep complying relevant standards, quality criteria and customer requirements and establish internally six sigma and quality assurance system to manufacture defect free products.

ISO 9001 QUALITY MANAGEMENT SYSTEM

Scope of Certification : Design, developed and production of butterfly valve
Production of sluice valve for water works

ISO 14001 ENVIRONMENT MANAGEMENT SYSTEM

Scope of Certification : The environmental management system as it relates to the design, development and production of sluice valves for water works and butterfly valves.

API 6D, API 609

- R&D CENTER (NO. 20063060)
- PLUG VALVE (NO. 10-0632972)
- WATER HAMMER PRESSURE PASTURE NON RETURN VALVE (NO. 0237927)
- THE BUTTERFLY VALVES WITH A ECCENTRIC ALLOY STEEL SEAT USED HIGH TEMPERATURE AND HIGH PRESSURE (NO. 0248722)
- GAS CHECK VALVE BY DOUBLE PRESSURE (NO. 0266617)
- CHECK VALVE WITH TRIPLE ECCENTRIC METAL SEAT FOR PREVENTION OF REVERSE CLASHING PRESSURE (NO. 0274161)
- FLANGE TYPE BUTTERFLY VALVE WITH ECCENTRIC METAL SEAT FOR ENSURING HIGH TEMPERATUREAND HIGH PRESSURE (NO. 0274168)
- HIGH CYCLE DAMPING CONTROL VALVE (NO. 0276176)
- MULTI TIGHT LAMINATED RUBBER SEAT BUTTERFLY VALVE (NO. 0310692)
- BIDIRECTIONAL BUTTERFLY VALVE BODY PILOT PRESSURE (NO. 0311741)

IMS / CE / DNV TA / KS B 2333

CONTENTS

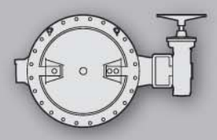

BUTTERFLY VALVE

METAL SEAT TYPE — 10p
RUBBER SEAT TYPE/RUBBER LINED TYPE — 11p
CATEGORY A,B TYPE OF API 609 — 14p
TWO LEVER BUTTERFLY VALVE — 20p

GATE VALVE

INSIDE / OUTSIDE SCREW TYPE — 21p
API 6D — 22p

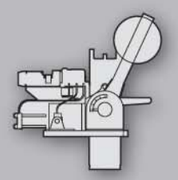

CHECK VALVE

NON-SLAM CHECK VALVE — 23p
NON-RETURN CHECK VALVE — 24p
SWING CHECK VALVE — 25p
DUAL CHECK VALVE — 26p
API 6D SWING CHECK VALVE — 27p

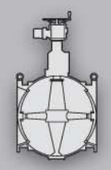

WATER SEAL VALVE

WATER SEALING TYPE — 28p

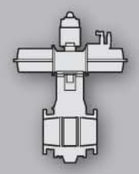

PLUG VALVE

METAL SEAT TYPE — 30p

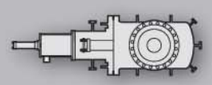

SLIDE GATE VALVE

RISER/DUMP DUCT/FEED LEG/DUMP LEG TYPE — 31p

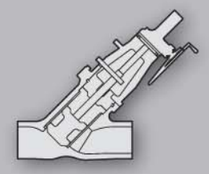

GLOBE CHECK VALVE

Y-PATTERN TYPE — 33p

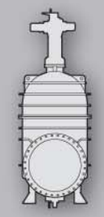

ISOLATION VALVE

GATE VALVE TYPE — 34p

HOT BLAST VALVE

WATER COOLING TYPE — 35p

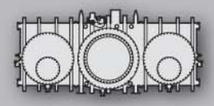

GOGGLE VALVE

OPEN/ ENCLOSED TYPE — 36p

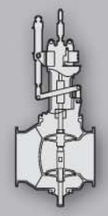

BLOW OFF VALVE

DOUBLE SEAT GLOBE TYPE — 37p

DATA SHEET — 38p_51p

BUTTERFLY VALVE

METAL SEAT TYPE

FEATURE

Metal Seat Type Butterfly valve is available to design and manufacture according to **ANSI B 16.34, KS B 2333**

FLANGE DIMENSION	ASME B16.5, KS B 1511, AWWA C 207
END CONNECTION	Flanged, Water, Lugged
FACE TO FACE DIMENSION	ASME B 16.10, ISO 5752, KS B 2306

MATERIAL

▪ BODY / DISC	Carbon Steel, Ductile Cast Iron, Stainless Steel, ALBronze
▪ STEM	Stainless Steel
▪ SEAT	Stellite overlay, Laminated Metal Seat, Solid Metal Seat

TEST ITEM (SPEC : ANSI B 16.34, KS B 2333)

- Pressure Test (ACCORDING TO PRESSURE TEST SPEC)

GENERAL APPLICATIONS

- Mixed Gas with Dust
- Waste Gas and Sludge Line
- Oil and Gas Production
- Steam
- Hot Gased
- Toxic and Lethal
- Fire-safe and Flammables
- Water, Sea water

SPECIFICATION

SIZE RANGE	2"~120"
PRESSURE CLASS	150LB, 300LB, 600LB 5K, 10K, 16K
OPERATING	Manual, Eletric, Pneumatic, Hydraulic

ADVANTAGE

- ZERO Leakage (Seat tightness)
- TRIPLE Shaft blowout protection
- High temperature compatibility
- Progressive sealing system
- Excellent flow characteristics
- Triple offset sealing system
- Double offset sealing system
- Bi-Direction

PRESSURE TEST SPEC (ANSI B 16.34) — TEST PRESSURE

	BODY	SEAT	
	HYDRO	HYDRO	PNEUMATIC
CLASS 150	32kgf/cm²	22kgf/cm²	6kgf/cm²
CLASS 300	79kgf/cm²	57kgf/cm²	6kgf/cm²
CLASS 600	154kgf/cm²	115kgf/cm²	6kgf/cm²
CLASS 900	234kgf/cm²	172kgf/cm²	6kgf/cm²

PRESSURE TEST SPEC (KS B 2304)

Seat	MPWP x 1.1 times
Body	MPWP x 1.5 times
MPWP : Maximum Permissible Working Pressure	

SEAT CONTACT

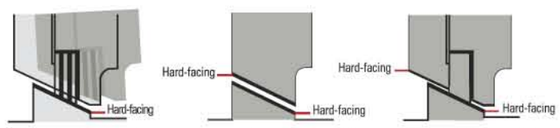

LAMINATED METAL SEAT — HARD-FACING DISC EDGE — SOLID METAL SEAT

SEALING SYSTEM

- Friction free sealing
- Low Torque
- Strong Durability

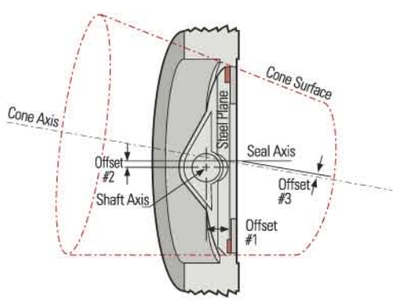

TRIPLE OFFSET SEALING SYSTEM

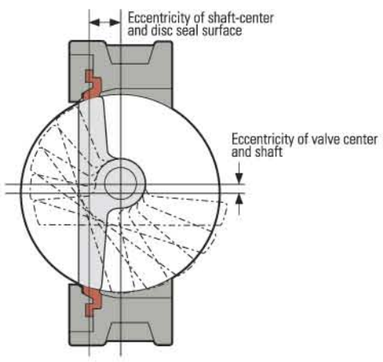

DOUBLE OFFSET SEALING SYSTEM

RUBBER SEAT TYPE | RUBBER LINED TYPE

RUBBER SEAT TYPE FEATURE

Rubber Seat Type Butterfly valve is available to design and manufacture according to **KS B 2333, BS 5155, AWWA C 504**

FLANGE DIMENSION	KS D 4309, AWWA C 207, KS B 1511
FACE TO FACE DIMENSION	KS B 2333, AWWA C 504

MATERIAL

▪ BODY / DISC	Carbon Steel, Ductile Cast Iron, Stainless Steel
▪ STEM	Stainless Steel, Bronze
▪ SEAT	Rubber (CR, EPDM, NBR, VITON)

TEST ITEM (SPEC : KS B 2304)

- Pressure Test

GENERAL APPLICATIONS

- Water

SPECIFICATION

SIZE RANGE	200mm ~ 3,600mm
PRESSURE CLASS	MAX 30kgf/cm²
OPERATING	Manual, Eletric (remote, Positioner, Transmitter), Pneumatic, Hydraulic

ADVANTAGE

- Compact construction
- Self-lubricated bearing system
- Low operation Torques
- Gas tight shut-off

PRESSURE TEST SPEC — TEST PRESSURE

Seat	MPWP x 1.1 times
Body	MPWP x 1.5 times
MPWP : Maximum Permissible Working Pressure	

SEAT CONTACT

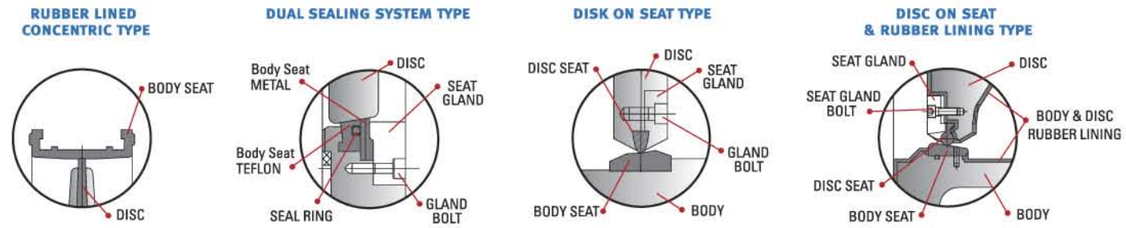

RUBBER LINED TYPE FEATURE

Rubber Lined Type Butterfly valve is available to design and manufacture according to **AWWA C 504, BS 5155**

FLANGE DIMENSION	AWWA C 207, ISO 2084, ASME B 16.5
FACE TO FACE DIMENSION	AWWA C 504, BS 5155, KS B 2333

MATERIAL

▪ BODY / DISC	Carbon Steel, Ductile Cast Iron
▪ STEM	Stainless Steel
▪ LINING	NR, NBR, EPDM

TEST ITEM (SPEC : AWWA C 504)

- Pressure Test

GENERAL APPLICATIONS

- Power plant

SPECIFICATION

SIZE RANGE	1,100mm ~ 3,000mm
PRESSURE CLASS	MAX 16kgf/cm²
OPERATING	Manual, Eletric, Pneumatic, Hydraulic

PRESSURE TEST SPEC — TEST PRESSURE

Seat	Rated pressure
Body	Rated pressure x 2 times

BUTTERFLY VALVE

DIMENSIONS

200mm ~ 1,000mm (Manual Operated)

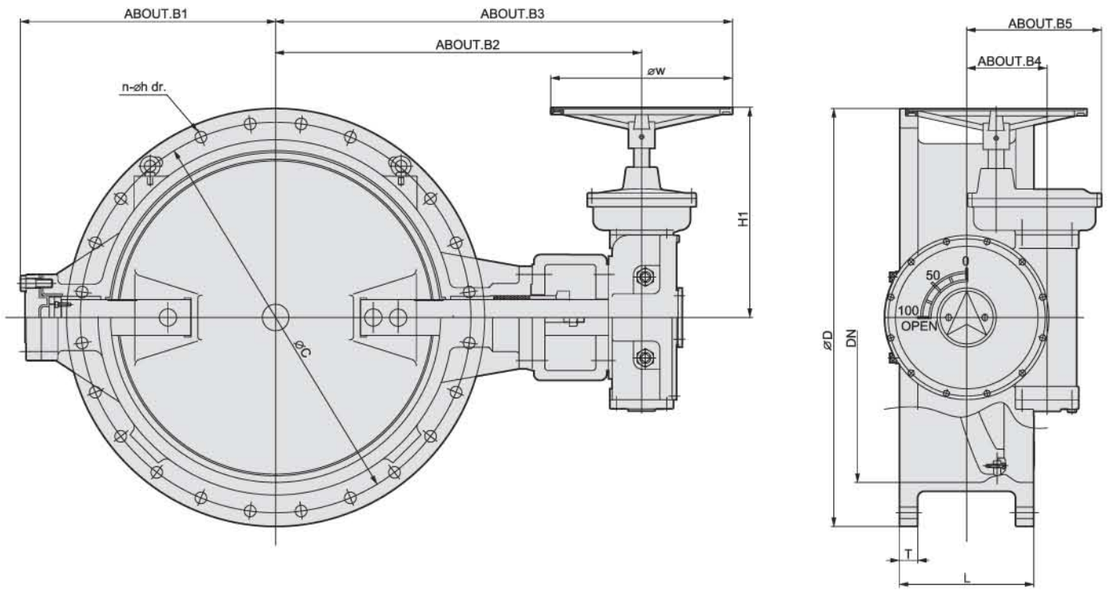

Unit : mm

DN	KS B 2333 Short Type	BS 5155 Short Type	AWWA C 504 Short Type	FLANGE				B1	B2	B3	B4	B5	ϕW	H1	Approx Weight (kg)
	L	L	L	ϕD	BOLT HOLE ϕC	BOLT HOLE n-ϕh	T X f								
200	152	152	152	340	295	8-23	27 X 3	213	425	582	83	240	315	220	96
250	165	165	203	395	350	12-23	29 X 3	244	465	622	83	240	315	220	120
300	178	178	203	445	400	12-23	31 X 4	276	495	652	121	278	315	283	145
350	190	190	203	505	460	16-23	32 X 4	310	538	695	121	273	315	283	195
400	216	216	203	565	515	16-28	34 X 4	343	578	735	121	278	315	283	256
450	222	222	203	615	565	20-28	35 X 4	367	606	806	177	377	400	377	288
500	229	229	203	670	620	20-28	36 X 4	400	638	838	177	377	400	377	353
600	267	267	203	780	725	20-31	40 X 4	453	680	880	177	377	400	377	454
700	292	292	305	895	840	24-31	46 X 4	525	815	1095	236	443	560	560	582
800	318	318	305	1015	950	24-34	49 X 5	596	842	1122	236	443	560	560	686
900	330	330	305	1115	1050	28-34	51 X 5	653	964	1244	236	443	560	560	1052
1000	410	410	305	1230	1160	28-37	55 X 5	730	1035	1365	333	540	700	560	1280

NOTE
1. Valve is the dimensions of KS B 2333, AWWA C 504, BS 5155 standard, but other standards are available on request.
2. Flange rating is KS D 4309 standard, but other standards are available on request.

1,100mm ~ 3,000mm (Manual Operated)

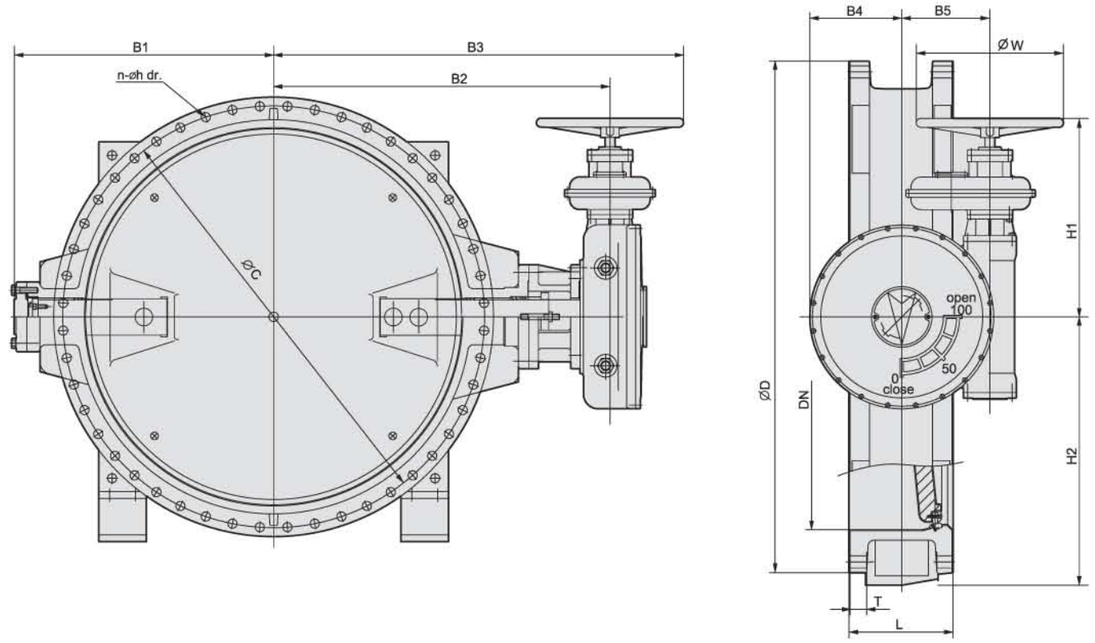

Unit : mm

DN	KS B 2333 Short Type	BS 5155 Short Type	AWWA C 504 Short Type	FLANGE				B1	B2	B3	B4	B5	ϕW	H1	H2	Approx Weight (kg)
	L	L	L	ϕD	BOLT HOLE ϕC	BOLT HOLE n-ϕh	T X f									
1100	450	450	343	1366	1270	32-37	61 X 5	770	1153	1433	333	540	700	560	700	1720
1200	470	470	381	1470	1387	32-37	63 X 5	860	1211	1490	333	540	700	560	750	2210
1350	530	530	381	1642	1552	36-38	68 X 6	955	1442	1792	470	820	700	700	825	2760
1500	530	530	381	1800	1710	36-38	74 X 6	1055	1530	1880	470	820	700	700	900	3480
1650	530	530	457	1950	1860	40-48	48 X 5	1325	1550	1900	470	820	700	700	1000	4280
1800	550	550	457	2115	2020	44-48	50 X 5	1425	1790	2140	470	820	700	700	1150	5250
2000	550	550	550	2325	2230	48-48	54 X 5	1525	1895	2245	535	885	700	860	1250	5920
2200	550	550	550	2550	2440	52-56	58 X 6	1670	2050	2590	535	1035	1000	860	1350	7140
2400	550	550	550	2760	2650	56-56	62 X 6	1830	2155	2655	535	1035	1000	860	1450	8105
2500	580	580	580	2860	2750	56-56	64 X 6	1890	2190	2690	535	1035	1000	860	1520	9320
2600	580	580	580	2960	2850	60-56	66 X 6	1990	2320	3070	600	1350	1500	900	1570	10250
2800	600	600	600	3180	3070	64-56	70 X 6	2100	2420	3170	600	1350	1500	900	1670	10975
3000	600	600	600	3405	3290	68-62	75 X 6	2150	2470	3220	600	1350	1500	900	1770	11600

NOTE
1. Valve is the dimensions of KS B 2333, AWWA C 504, BS 5155 standard, but other standards are available on request.
2. Flange rating is KS D 4309 standard, but other standards are available on request.

BUTTERFLY VALVE

CATEGORY A, B TYPE OF API 609

FEATURE

Butterfly valve is available to design and manufacture according to **API 609**

FLANGE DIMENSION	ASME B 16.5, MSS SP-44 for DIN 550 (NPS 22) ASME B 16.47 SERIES A for DIN 650 (NPS 26) and larger sizes.
END CONNECTION	Double Flanged, Wafer lugged
FACE TO FACE DIMENSION	ISO 5752, API 609

MATERIAL

- BODY / DISC — Carbon Steel, Cast Iron, Ductile Cast Iron, Stainless Steel
- STEM — Stainless Steel
- SEAT RING — Viton, Tetlon, Metal

TEST ITEM (SPEC : API 609, API 598)

- Pressure Test (ACCORDING TO EACH CLASS)
- Force (HANDWHEELS OR WRENCHES, LEVERS)
- Fire Safety (IF SPECIFIED BY THE PURCHASER)

GENERAL APPLICATIONS

- Power Plant
- Petroleum
- Chemical Processing

SPECIFICATION

SIZE RANGE	2" ~ 26"
PRESSURE CLASS	150LB, 300LB, 600LB
OPERATING	Manual (Lever, Hand wheel) Eletric, Pneumatic (Remote, Positioner, Transmitter)

ADVANTAGE

- Double eccentric geometry
- Anti-Voc packing (stem seal with "O" helium Bubbles)
- Long cycle life (superior finish-packing champer, stem)
- Seat durability (hard-facing)
- No cavity (There is no cavity to allow Build-up of solids)

PRESSURE TEST SPEC — TEST PRESSURE

	BODY	SEAT	
	HYDRO	HYDRO	PNEUMATIC
CLASS 150	32kgf/cm²	22kgf/cm²	6kgf/cm²
CLASS 300	79kgf/cm²	57kgf/cm²	6kgf/cm²
CLASS 600	154kgf/cm²	115kgf/cm²	6kgf/cm²
CLASS 900	234kgf/cm²	172kgf/cm²	6kgf/cm²

CATEGORY "A" TYPE

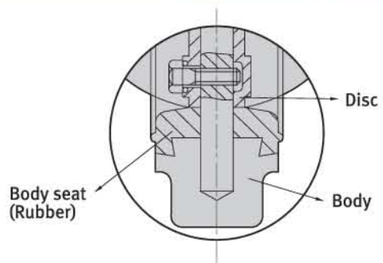

CATEGORY "B" TYPE

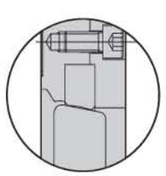

Body on seat type

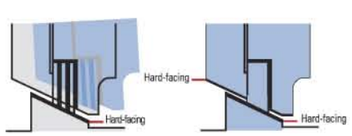

Disc on seat type

CATEGORY A TYPE OF API 609 DIMENSIONS

Wafer Type

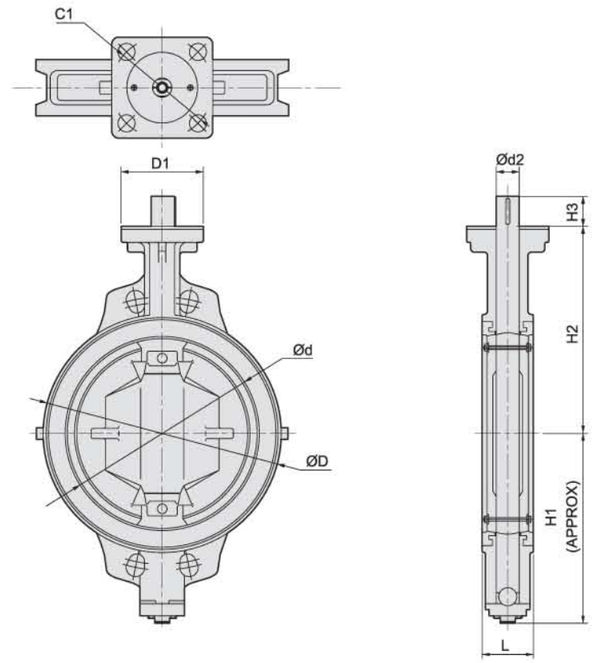

Unit : mm

Nominal size		d	D	D1	L	ϕd2	H1	H2	H3	Approx. weight (kg)
mm	inch									
40	1 1/2	45	80	70	35	10	61	132	21.5	1.5
50	2	56	90		43		68	138		1.8
65	2 1/2	69	115		46		79	151		2.5
80	3	84	126			12	86	156	22.5	2.6
100	4	104	146		52	14	103	167		3.4
125	5	130	181	102	56	16	118	191	27.5	5.4
150	6	153.5	211			18	135	202		7.0
200	8	199	256		60	22	177	227	30	10.4
250	10	253	322		68	28	215	280	35	18
300	12	302	367		78	32	253	312		25
350	14	337	410	140			276	348	48	42
400	16	394	469		102	40	338	383	54	64
450	18	441	525		114	46	368	413	65	87
500	20	492	580		127	50	403	453	79	114
600	24	584	682	165	154	55	458	528		191

NOTE Lay-length of valve is the dimension of API 609, But other standards are avalible on request.

BUTTERFLY VALVE

CATEGORY A TYPE OF API 609 DIMENSIONS

Full-Lugged Type

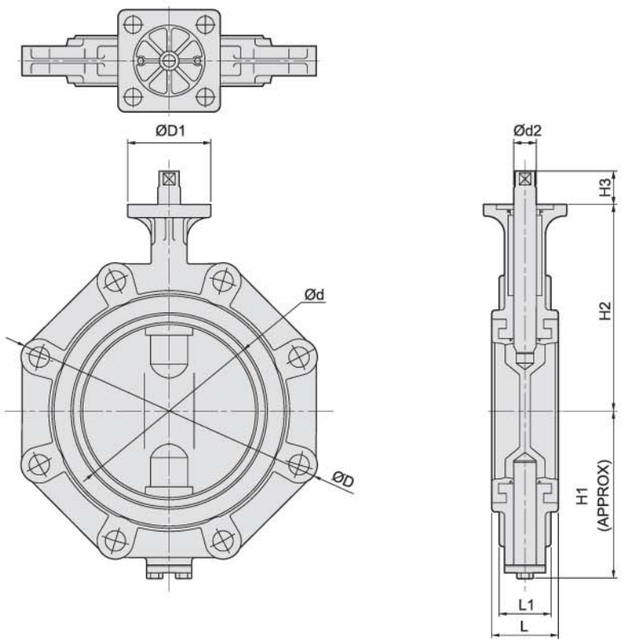

Unit : mm

Nominal size		d	D	D1	L	ϕd2	H1	H2	H3	Approx. weight (kg)
mm	inch									
50	2	56	90	70	43	10	85	138	21.5	2.5
65	2 1/2	69	115		46		94	151		3.5
80	3	84	126			12	109	156	22.5	4.0
80	3		190							4.8
100	4	104	223		52	14	117	167		6.7
125	5	130	250	102	56	16	143	191	27.5	8.8
150	6	153.5	276			18	164	202		10.4
200	8	199	334		60	22	176	227	30	16.3
250	10	253	402		68	28	215	280	35	27
300	12	302	483	125	78	32	253	312		39
			472							
350	14	337	505	140			276	348	48	66
			533							
400	16	394	579		102	40	338	383	54	107
450	18	441	526		114	46	368	413	65	128
500	20	492	634		127	50	403	453	79	170
			696							
600	24	584	820	165	154	55	458	528		275
600	24		795							269

NOTE Lay-length of valve is the dimension of API 609, But other standards are avalible on request.

Semi-Lugged Type

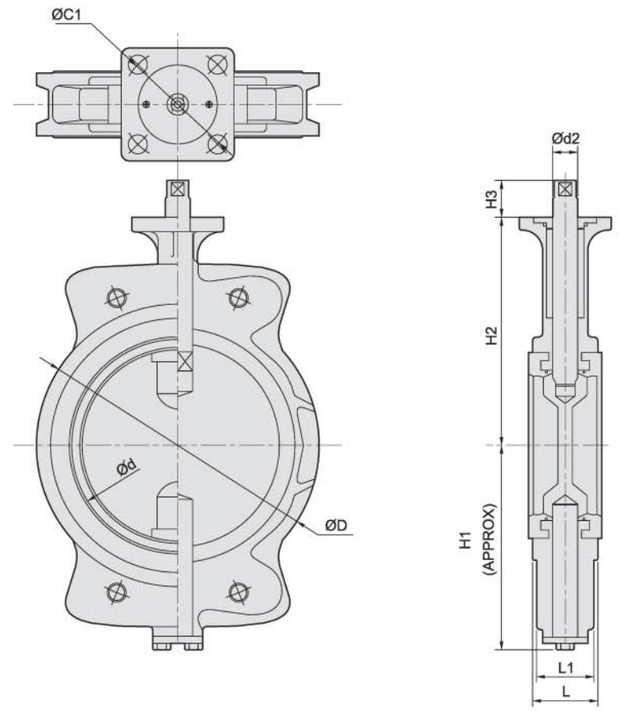

Unit : mm

Nominal size		d	D	D1	L	ϕd2	H1	H2	H3	Approx. weight (kg)
mm	inch									
50	2	56	90	70	43	10	85	138	21.5	2.5
65	2 1/2	69	115		46		94	151		3.5
80	3	84	126			12	109	156	22.5	4.0
100	4	104	146		52	14	117	167		5.0
125	5	130	181	102	56	16	143	191		8.0
150	6	153.5	211			18	164	202	27.5	11.0
200	8	199	256		60	22	86	227	30	15.0
250	10	253	322		68	28	215	280	35	24
300	12	302	367		78	32	253	312		31
350	14	337	410	140			276	348	48	47
400	16	394	469		102	40	338	383	54	72
450	18	441	525		114	46	368	413	65	96
500	20	492	580		127	50	403	453	79	127
600	24	584	682	165	154	55	458	528		191

NOTE Lay-length of valve is the dimension of API 609, But other standards are avalible on request.

BUTTERFLY VALVE

CATEGORY B TYPE OF API 609 DIMENSIONS

Wafer Type

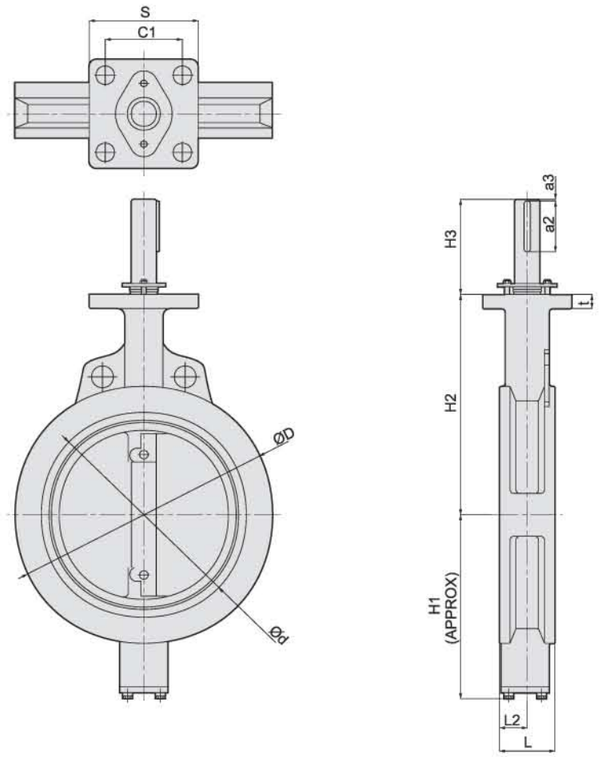

Unit : mm

Nominal size		d	D	L	L2	H1	H2	H3	d2	a2	a3	t	S	C1	Approx. weight (kg)
mm	inch														
80	3	89	127	46	23	95	147	52.5	16	16.5	36	15	102	72	5.0
100	4	112	156	52	24	110	170								6.2
125	5	137	185	56		139	185		20						9.3
150	6	163	216	57	23	164	205	55.5	22	20	35.5		125	88.4	12.5
200	8	213	269	64	28	190	236	63	28	30	33				19.0
250	10	263	330	71	31	236	283	108	32	65.3	2	18	140	99	33
300	12	315	381	81	35	246	310	111	35	70.3					42
350	14	350	416	92	39.5	308	340	113	38	70					61
400	16	400	475	102	39	348	372		42						88
450	18	450	534	114	43	366	406	141.5	45	60	8	20	165	116.7	135
500	20	500	589	127	50	405	442		49	70	9				173
600	24	600	693	154	64	461	493		59		10				272

NOTE Lay-length of valve is the dimension of API 609, But other standards are avalible on request.

Lugged type

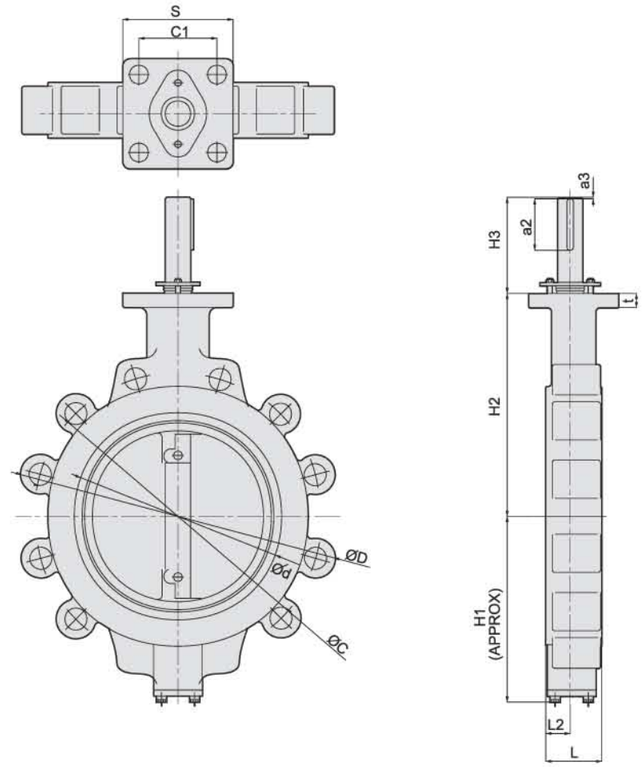

Unit : mm

Nominal size		d	D	L	L2	L3	H1	H2	H3	d2	a2	a3	S1	S	t	C1	C	Approx. weight (kg)
mm	inch																	
80	3	89	198	46	23	38	95	147	52.5	16	16.5	–	14	102	15	72	152.5	5.0
100	4	112	227	52	24	46	110	170									190.5	6.2
125	5	137	256	56		48	139	185		20			16				216.0	9.3
150	6	163	282	57	23	49	164	205	55.5	22	20		18	125		88.4	241.5	12.5
200	8	213	343	64	28	54	190	235	63	28	30		24				298.5	19.0
250	10	263	412	71	31	61	236	283	108	32	65	2	–	140	18	99	362.0	33
300	12	315	482	81	35	71	246	310	111	35	70						432.0	42
350	14	350	536	92	39.5	70	308	340	113	38							476.2	61
400	16	400	600	102	39	75	348	372		42							539.7	88
450	18	450	636	114	43	83	366	406	141.5	45	60	8		165	20	116.7	577.8	135
500	20	500	720	127	50	90	405	442		49	70	9					635.0	173
600	24	600	814	154	64	131	461	493		59		10					749.3	272

NOTE Lay-length of valve is the dimension of API 609, But other standards are avalible on request.

BUTTERFLY VALVE

TWO LEVER BUTTERFLY VALVE

FEATURE

Two lever Butterfly Valve is available to design and manufacture according to **Maker Standard.**

FLANGE DIMENSION	KS, JIS, ASME, DIN
FACE TO FACE DIMENSION	Maker Standard
MATERIAL	
▪ BODY / DISC	Fabricated
▪ STEM	Stainless Steel
▪ SEAT	Metal, Rubber

TEST ITEM

- Pressure Test (ACCORDING TO EACH CLASS)

GENERAL APPLICATIONS

- Hot Air
- Steam
- Gas

SPECIFICATION

SIZE RANGE	500 ~ 5,000mm
PRESSURE CLASS	MAX 10kgf/cm²
MODEL	HSPCV, HSPV
OPERATION	Manual, Pneumatic, Hydraulic, Electric
TEMPERATURE	MAX 450 ˚C

DESCRIPTION

- Various seat arrangements
- Various Valve Actuation
- High frequency of operation
- Friction-free motion
- Compact design
- A special lever mechanism
- No jamming under high temperature

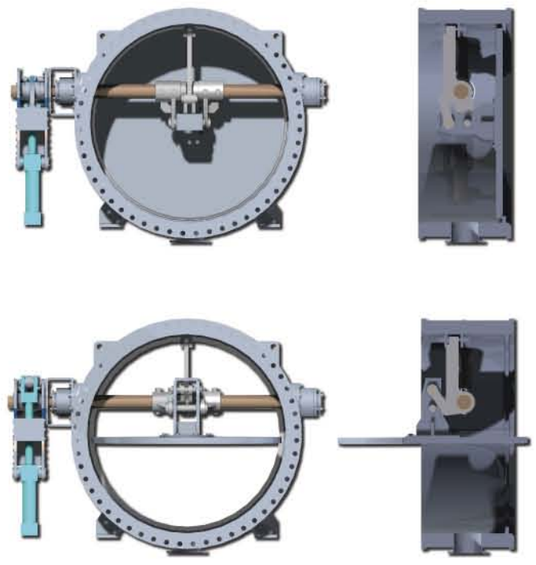

GATE VALVE

INSIDE I OUTSIDE SCREW TYPE

FEATURE

Inside / Outside Screw Type Gate valve is available to design and manufacture according to **KS B 2332**

FLANGE DIMENSION	ASME B 16.5, ASME B 16.47 AWWA C 207, KS B 2332
FACE TO FACE DIMENSION	KS B 2332
MATERIAL	
▪ BODY / BONNET / DISC	Carbon Steel, Ductile Cast Iron
▪ STEM	Stainless Steel, Bronze
▪ SEAT	Bronze Casting, Stainless Casting, Stellite

TEST ITEM (SPEC : KS B 2304)

- Pressure Test

GENERAL APPLICATIONS

- Water, Sea water
- Sewage
- Sluge
- Gas

SPECIFICATION

SIZE RANGE	200A ~ 1,500A
PRESSURE CLASS	MAX 20kgf/cm²
OPERATING	Manual, Eletric (remote, Positioner, Transmitter), Pneumatic

PRESSURE TEST SPEC — TEST PRESSURE

Seat	MPWP x 1.1 times
Body	MPWP x 1.5 times

MPWP : Maximum Permissible Working Pressure

Unit : mm

DN (d)	L	FLANGE					H1	H2	A	n-d	B1	B2	B3	Model of Actuator
		D	G	BOLT HOLE C	BOLT HOLE n-h	T X f								
200	300	340	264	295	8-23	27 X 3	210	920	250	2-19	324	270	360	TM-01
250	380	395	319	350	12-23	29 X 3	240	985	330	2-19	324	270	360	
300	400	445	367	400	12-23	31 X 4	280	1120	330	2-19	352	341	450	TM-04
350	430	505	427	460	16-23	32 X 4	310	1205	380	2-19	352	341	450	
400	470	565	477	515	16-28	34 X 4	340	1430	440	2-24	352	341	450	
450	500	615	527	565	20-28	35 X 4	370	1540	500	2-28	380	396	480	TM-07
500	530	670	582	620	20-28	36 X 4	400	1750	550	2-28	380	396	480	
600	560	780	682	725	20-31	40 X 4	450	1985	650	2-28	380	396	480	
700	610	895	797	840	24-31	46 X 4	500	2160	760	2-32	400	453	585	TM-1
800	690	1015	904	950	24-34	49 X 5	560	2370	880	2-32	400	453	585	
900	740	1115	1004	1050	28-34	51 X 5	620	2575	980	2-38	400	453	585	
1000	770	1230	1111	1160	28-37	55 X 5	680	2800	1100	2-38	400	453	585	
1100	800	1340	1221	1270	32-37	61 X 5	750	2925	1200	2-42	400	453	585	
1200	820	1470	1304	1387	32-37	63 X 5	810	3150	1300	2-42	400	453	585	
1350	850	1642	1462	1552	36-42	68 X 6	900	3465	1480	2-42	400	453	585	
1500	900	1800	1620	1710	36-42	74 X 6	990	3780	1600	2-42	400	453	585	

NOTE
1. Flange rating is KS B 2332 standard, but other standards are available on request.
2. Lay-length of valve is KS B 2332 standard, but other standards are available on request.
3. OUTSIDE SCREW TYPE is avaliable on request.

DIMENSION

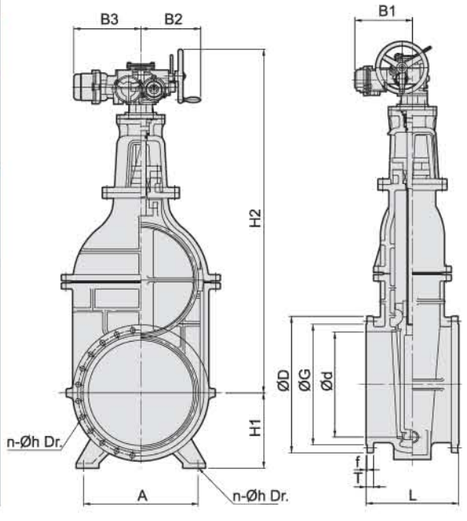

GATE VALVE

API 6D

FEATURE

Gate valve is available to design and manufacture according to **API 6D, API 609**

FLANGE DIMENSION	ASME B 16.5, MSS SP-44 FOR DIN 550 (NPS 22) ASME B 16.47 SERIES A FOR DIN 650 (NPS 26) and larger sizes.
BUTTWELDING DIMENSION	ASME B 16.25
FACE TO FACE DIMENSION	ASME B 16.10
MATERIAL	
▪ BODY / BONNET / DISC	Carbon Steel, Stainless Steel
▪ STEM	Stainless Steel, Bronze, Stellite

TEST ITEM (SPEC : API 6D, API 598)

- Pressure Test (ACCORDING TO EACH CLASS)
- Force (HANDWHEELS OR WRENCHES, LEVERS)
- Fire Safety (IF SPECIFIED BY THE PURCHASER)
- Anti-Static Device (IF SPECIFIED BY THE PURCHASER)

GENERAL APPLICATIONS

▪ Water ▪ Steam ▪ Gas ▪ Oil

SPECIFICATION

SIZE RANGE	2"~24"
PRESSURE CLASS	150LB, 300LB, 600LB, 900LB
OPERATING	MANUAL, ELECTRIC, PNEUMATIC

PRESSURE TEST SPEC — TEST PRESSURE

	BODY	SEAT		BACK SEAT
	HYDRO	HYDRO	PNEUMATIC	HYDRO
CLASS 150	32kgf/cm²	22kgf/cm²	6kgf/cm²	32kgf/cm²
CLASS 300	79kgf/cm²	57kgf/cm²	6kgf/cm²	79kgf/cm²
CLASS 600	154kgf/cm²	115kgf/cm²	6kgf/cm²	154kgf/cm²
CLASS 900	234kgf/cm²	172kgf/cm²	6kgf/cm²	234kgf/cm²

CLASS 150 — Unit : mm

SIZE	FACE TO FACE	END TO END	HAND WHEEL DIA	APPROX
	A	B	D	H
2"	178	216	215	400
2½"	190	241	215	410
3"	203	283	250	470
4"	229	305	250	530
5"	254	381	300	670
6"	267	403	300	772
8"	292	419	350	995
10"	330	457	400	1175
12"	356	502	450	1400
14"	381	572	450	1530
16"	406	610	500	1760
18"	432	660	550	1950
20"	457	711	600	2140
24"	508	813	700	2520

CLASS 300 — Unit : mm

SIZE	FACE TO FACE	END TO END	HAND WHEEL DIA	APPROX
	A	B	D	H
2"	216	216	215	430
2½"	241	241	215	485
3"	283	283	250	535
4"	305	305	250	650
5"	381	381	300	805
6"	403	403	300	890
8"	419	419	350	1090
10"	457	457	400	1300
12"	502	502	450	1445
14"	762	762	550	1780
16"	838	838	700	1960
18"	914	914	800	2145
20"	991	991	800	2505
24"	1143	1143	800	2795

CLASS 600 — Unit : mm

SIZE	FACE TO FACE	END TO END	HAND WHEEL DIA	APPROX
	A	B	D	H
2"	292	292	215	560
2½"	330	330	250	600
3"	356	356	250	620
4"	432	432	300	730
5"	508	508	350	895
6"	559	559	400	990
8"	660	660	450	1160
10"	787	787	500	1400
12"	838	838	600	1610
14"	889	889	700	1790
16"	991	991	800	1990
18"	1092	1092	900	2150
20"	1194	1194	1000	2390
24"	1397	1397	1100	2985

CLASS 900 — Unit : mm

SIZE	FACE TO FACE	END TO END	HAND WHEEL DIA	APPROX
	A	B	D	H
2"	368	368	215	570
2½"	419	419	250	610
3"	381	381	250	630
4"	457	457	350	810
5"	559	559	350	880
6"	610	610	450	1050
8"	737	737	550	1360
10"	838	838	630	1410
12"	965	965	700	1700
14"	1029	1029	800	1890
16"	1130	1130	800	1980
18"	1219	1219	900	2150
20"	1321	1321	1000	2380

DIMENSION "B" BUTT WELDING

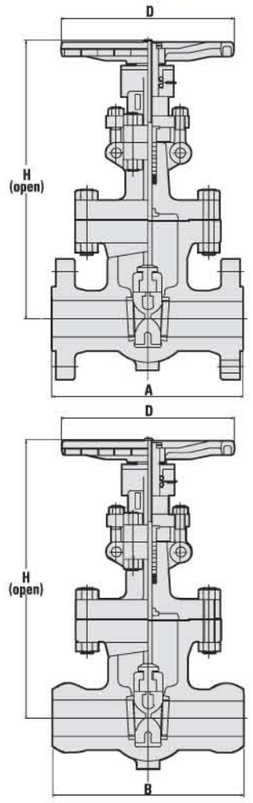

CHECK VALVE

NON-SLAM CHECK VALVE

FEATURE

Non-Slam Check valve is available to design and manufacture according to **Maker Standard**

FLANGE DIMENSION	KS B 1511, ASME B 16.5 ASME B 16.47, AWWA C 207
COMPONENT	Main valve + Hydraulic + Control valve + Stop valve + Weight + By-pass valve
FACE TO FACE DIMENSION	Maker standard
MATERIAL	
▪ BODY / DISC	Carbon Steel, Ductile Cast Iron, Stainless Steel
▪ STEM	Stainless Steel
▪ SEAT	Laminated Metal Seat, Resillent Seat

TEST ITEM (SPEC : KS B 2304)

▪ Pressure Test ▪ Performance Test

GENERAL APPLICATIONS

▪ Water ▪ Steam ▪ Gas

SPECIFICATION

SIZE RANGE	400A ~ 1,500A
PRESSURE CLASS	MAX 16kgf/cm²
OPERATING	Hydraulic

ADVANTAGE

- Triple Offset-Design with inclined conical Sealing System
- Adjustable, Hydraulic damping system
- Stable operation during flow transients
- Hydraulic Damping system

PRESSURE TEST SPEC — TEST PRESSURE

Back Seat	MPWP x 1.1 times or 0.3 times
Body	MPWP x 1.5 times
	MPWP : Maximum Permissible Working Pressure

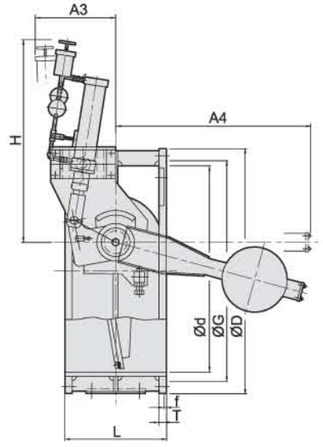

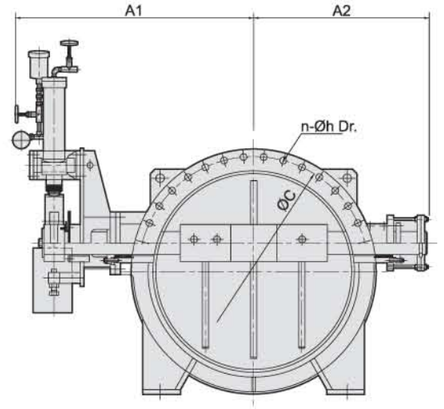

Unit : mm

DN (d)	L	FLANGE					A1	A2	A3	A4	H	Weight (kg)
		D	G	BOLT HOLE		T X f						
				C	n-h							
400	310	560	475	510	16-27	28 X 3	470	400	230	440	550	400
450	330	620	530	565	20-27	30 X 3	500	430	300	450	565	450
500	350	675	585	620	20-27	30 X 3	570	470	300	460	625	500
600	390	795	690	730	24-33	32 X 3	700	540	470	750	825	700
700	430	905	800	840	24-33	34 X 3	760	600	470	950	895	900
800	470	1020	905	950	28-33	36 X 3	865	660	510	980	1015	1200
900	510	1120	1005	1050	28-33	38 X 3	930	725	510	1020	1095	1400
1000	550	1235	1110	1160	28-39	40 X 3	1050	800	520	1080	1175	1500
1100	590	1345	1220	1270	28-39	42 X 3	1150	870	520	1150	1200	2100
1200	630	1465	1325	1380	32-39	44 X 3	1200	930	530	1200	1260	2500
1350	670	1630	1480	1540	36-45	48 X 3	1250	1020	530	1300	1380	3400
1500	750	1795	1635	1700	40-45	50 X 3	1550	1115	530	1400	1470	4500

NOTE
1. Flange rating is KS B 1511-10K standard, but other standards are available on request.
2. Lay-length of valve is the dimension of Maker's standard, but other standards are available on request.

CHECK VALVE

NON-RETURN CHECK VALVE

FEATURE

Non-Return Check valve is available to design and manufacture according to **Maker standard**

FLANGE DIMENSION	ASME B 16.5, ASME B 16.47, AWWA C 207
COMPONENT	Main valve + Hydraulic (occurrence system) + Weight
FACE TO FACE DIMENSION	Maker standard
MATERIAL	
▪ BODY / DISC	Carbon Steel, Stainless Steel
▪ STEM	Stainless Steel
▪ SEAT	Rubber (NBR, EPDM, VITON)

TEST ITEM (SPEC : KS B 2304)

- Pressure Test
- Performance Test

GENERAL APPLICATIONS

- Water
- Steam
- Gas

SPECIFICATION

SIZE RANGE	400A ~ 3,000A
PRESSURE CLASS	MAX 16kgf/cm²

ADVANTAGE

- Excellent Sealing characteristics at high and low operating pressure
- Short closing travel
- Absorption of high dynamic forces
- Low triction

PRESSURE TEST SPEC — TEST PRESSURE

Back Seat	MPWP x 1.1 times or 0.3 times
Body	MPWP x 1.5 times
	MPWP : Maximum Permissible Working Pressure

Unit : mm

d	L	FLANGE					A1	A2	A3 (Ref.)	A4 (Ref.)	H (Ref.)
		D	G	BOLT HOLE C	BOLT HOLE n-h	T X f					
400	216	565	477	515	16-28	34 X 4	480	470	600	660	780
450	222	615	527	565	20-28	35 X 4	520	490	600	680	820
500	229	670	582	620	20-28	36 X 4	550	520	600	710	880
600	267	780	682	725	20-31	40 X 4	620	560	820	815	950
700	292	895	797	840	24-31	46 X 4	700	645	820	900	1050
800	318	1015	904	950	24-34	49 X 5	760	690	820	940	1200
900	330	1115	1004	1050	28-34	51 X 5	820	750	1200	1000	1300
1000	410	1230	1111	1160	28-37	55 X 5	900	920	1200	1240	1500
1100	450	1366	1200	1270	32-37	61 X 5	970	1000	1200	1320	1600
1200	470	1470	1304	1387	32-37	63 X 5	1050	1100	1200	1480	1700
1350	530	1642	1462	1552	36-38	68 X 6	1170	1200	1200	1580	1800
1500	530	1800	1620	1710	36-38	74 X 6	1270	1300	1300	1700	2000
1650	530	1950	1770	1680	40-48	48 X 5	1350	1400	1300	1800	2200
1800	550	2115	1960	2020	44-48	50 X 5	1450	1450	1300	1850	2400
2000	550	2325	2170	2230	48-48	54 X 5	1550	1550	1500	1950	2600
2200	550	2250	2370	2440	52-56	58 X 6	1680	1700	1500	2100	2900
2400	580	2760	2570	2650	56-56	62 X 6	1840	1800	1500	2200	3200
2500	580	2860	2670	2750	56-56	64 X 6	1900	1850	1500	2250	3300
2600	580	2960	2780	2850	60-56	66 X 6	2000	1900	1650	2500	3400
2800	600	3180	3000	3070	64-56	70 X 6	2100	2000	1650	2600	3600
3000	600	3405	3210	3290	68-62	75 X 6	2150	2100	1650	2650	3800

NOTE
1. Flange rating is KS B 2332 standard, but other standards are available on request.
2. Lay-length of valve is KS B 2332 standard, but other standards are available on request.

DIMENSION

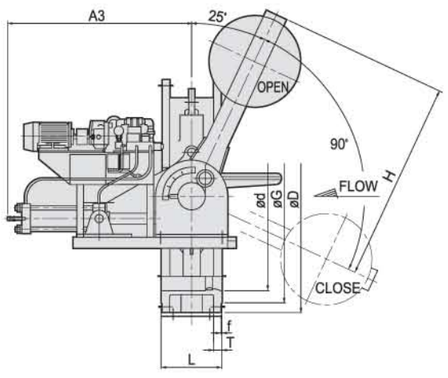

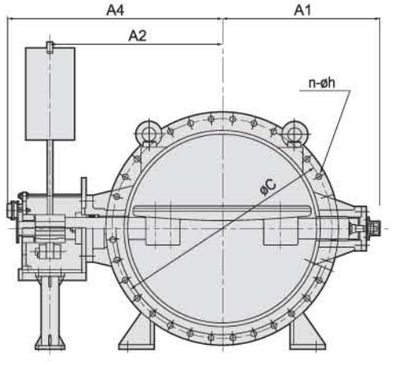

SWING CHECK VALVE

FEATURE

Swing Check valve is available to design and manufacture according to **Maker standard**

FLANGE DIMENSION	KS B 1511, ASME B 16.5, AWWA C 207
COMPONENT	MAIN V/V + BY-PASS V/V + WEIGHT + HYDRAULIC+CONTROL V/V
FACE TO FACE DIMENSION	Maker standard
MATERIAL	
▪ BODY / DISC	Carbon Steel, Stainless Steel
▪ STEM	Stainless Steel
▪ SEAT	Metal(Bronze or Stainless), Rubber

TEST ITEM (SPEC : KS B 2304)

- Pressure Test

GENERAL APPLICATIONS

- Water
- Steam
- Gas

SPECIFICATION

SIZE RANGE	80A~900A
PRESSURE CLASS	MAX 16kgf/cm²

ADVANTAGE

- Gravity Closing
- Anti-blowout Shaft Design
- Low operation Torque
- OPERATION : Free Swing or with Hydraulic Closing assistance
- Hydraulic Damping system(option)

PRESSURE TEST SPEC — TEST PRESSURE

Back Seat	MPWP x 1.1 times or 0.3 times
Body	MPWP x 1.5 times
	MPWP : Maximum Permissible Working Pressure

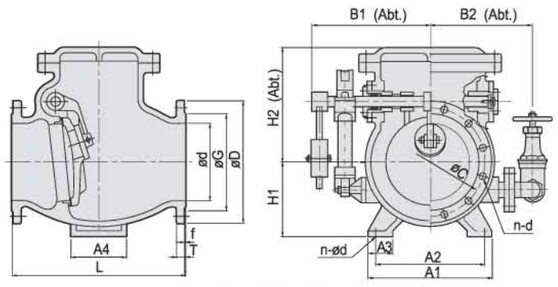

Non-Slam Swing Check valve

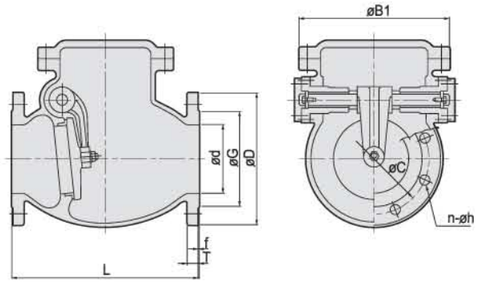

Swing Check valve

Unit : mm

d	L	FLANGE					H1	H2	B1	B2	A1	A2	A3	A4	n-d	MODEL
		D	g	C	T X f	n-h										
80	240	185	126	150	24x2	8-19	-	150	200	-	-	-	-	-	-	
100	290	210	151	175	24x2	8-19	-	175	240	-	-	-	-	-	-	B
150	410	280	212	240	26x2	8-23	-	260	330	-	-	-	-	-	-	
200	500	330	262	290	26x2	12-23	-	330	330	270	-	-	-	-	-	
250	560	400	324	355	30x2	12-25	240	370	420	290	400	350	80	130	2-25	
300	700	445	368	400	32x3	16-25	250	425	470	340	450	350	100	150	2-25	
350	790	490	413	445	34x3	16-25	310	475	520	420	480	400	100	150	2-25	
400	830	560	475	510	36x3	16-27	340	500	580	470	540	440	125	200	2-25	
450	950	620	530	565	38x3	20-27	370	545	700	550	600	500	125	200	2-25	
500	1070	675	585	620	40x3	20-27	400	615	750	600	650	550	125	200	2-28	A
600	1200	795	690	730	44x3	24-33	450	755	800	650	750	650	150	250	2-28	
700	1300	905	800	840	48x3	24-33	500	870	900	700	860	760	150	250	2-35	
800	1450	1020	905	950	52x3	28-33	560	910	1000	800	980	880	200	300	2-35	
900	1600	1120	1005	1050	54x3	28-33	640	1040	1100	900	1100	980	200	300	2-38	

NOTE
1. Flange rating is KS B 1511(10K) standard, but other standards are available on request.
2. Lay-length of valve is the dimension of maker standard, but other standards are available on request.

CHECK VALVE

DUAL CHECK VALVE

FEATURE

Dual Check valve is available to design and manufacture according to **API 6D**

FLANGE DIMENSION	API 6D
FACE TO FACE DIMENSION	API 6D
MATERIAL	
▪ BODY / DISC	Carbon Steel, Stainless Steel
▪ STEM & SPRING	Stainless Steel

TEST ITEM (SPEC : API 6D)

- Pressure Test

GENERAL APPLICATIONS

- Water, Sea water
- Steam
- Gas

SPECIFICATION

SIZE RANGE	2"~24"
PRESSURE CLASS	150LB, 300LB, 600LB, 900LB

ADVANTAGE

- High torsion spring
- Shock Bumpers
- Retainerless Body design
- Low weight

PRESSURE TEST SPEC — TEST PRESSURE

	BODY	SEAT	
	HYDRO	HYDRO	PNEUMATIC
CLASS 150	32kgf/cm²	22kgf/cm²	6kgf/cm²
CLASS 300	79kgf/cm²	57kgf/cm²	6kgf/cm²
CLASS 600	154kgf/cm²	115kgf/cm²	6kgf/cm²
CLASS 900	234kgf/cm²	172kgf/cm²	6kgf/cm²

Unit : mm

DN	Class 150		Class 300		Class 400		Class 600		
	ϕD	L	ϕD	L	ϕD	L	ϕD	L	ϕd
50A	90	54	101	54	101	54	101	60	60
65A	115	54	121	54	121	60	121	67	73
80A	126	57	131	57	137	67	137	73	89
100A	146	64	156	64	162	67	162	73	114
125A	181	70	187	70	200	83	200	86	141
150A	211	76	217	76	235	95	235	98	168
200A	257	95	267	95	280	127	280	127	219
250A	322	108	330	108	353	140	353	146	274
300A	367	143	375	143	403	181	403	181	324
350A	410	184	420	184	447	222	447	222	356
400A	470	191	483	191	507	232	507	232	406
450A	530	203	538	203	572	264	572	264	457
500A	580	213	593	213	627	292	627	292	508
600A	688	222	697	222	731	318	731	318	610

DIMENSION

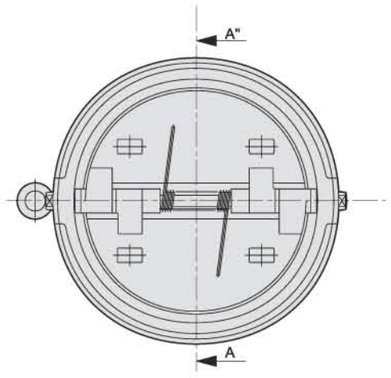

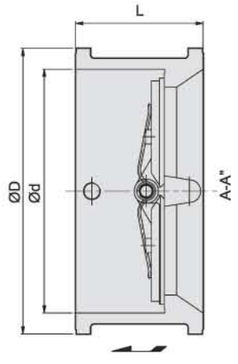

API 6D SWING CHECK VALVE

FEATURE

Check valve is available to design and manufacture according to **API 6D, API 594**

FLANGE DIMENSION	ASME B 16.5, MSS SP-44 for DIN 550 (NPS 22) ASME B 16.47 SERIES A for DIN 650 (NPS 26) and larger sizes.
BUTTWELDING DIMENSION	ASME B 16.25
FACE TO FACE DIMENSION	ASME B 16.10
MATERIAL	
▪ BODY / DISC	Carbon Steel, Stainless Steel, Bronze
▪ STEM	Stainless Steel, Bronze

TEST ITEM (SPEC : API 6D, API 598)

- Pressure Test (ACCORDING TO EACH CLASS)

GENERAL APPLICATIONS

- Water
- Steam
- Gas
- Oil

SPECIFICATION

SIZE RANGE	2"~24"
PRESSURE CLASS	150LB, 300LB, 600LB, 900LB

PRESSURE TEST SPEC — TEST PRESSURE

	BODY	SEAT	
	HYDRO	HYDRO	PNEUMATIC
CLASS 150	32kgf/cm²	22kgf/cm²	6kgf/cm²
CLASS 300	79kgf/cm²	57kgf/cm²	6kgf/cm²
CLASS 600	154kgf/cm²	115kgf/cm²	6kgf/cm²
CLASS 900	234kgf/cm²	172kgf/cm²	6kgf/cm²

CLASS 150 — Unit : mm

SIZE	FACE TO FACE	END TO END	APPROX
	A	B	H
2"	203	203	130
2½"	216	216	135
3"	241	241	140
4"	292	292	170
5"	330	330	185
6"	356	356	220
8"	495	495	250
10"	622	622	280
12"	698	698	320
14"	787	787	330
16"	864	864	450
18"	978	978	530
20"	978	978	570
24"	1295	1295	670

CLASS 300 — Unit : mm

SIZE	FACE TO FACE	END TO END	APPROX
	A	B	H
2"	267	267	170
2½"	292	292	185
3"	318	318	210
4"	356	356	245
5"	400	400	270
6"	444	444	295
8"	533	533	345
10"	622	622	390
12"	711	711	445
14"	838	838	470
16"	864	864	510
18"	978	978	545
20"	1016	1016	600
24"	1346	1346	690

CLASS 600 — Unit : mm

SIZE	FACE TO FACE	END TO END	APPROX
	A	B	H
2"	292	292	180
2½"	330	330	190
3"	356	356	200
4"	432	432	270
5"	508	508	300
6"	559	559	330
8"	660	660	380
10"	787	787	410
12"	838	838	480
14"	889	889	520
16"	991	991	560
18"	1092	1092	630
20"	1194	1194	670
24"	1397	1397	700

CLASS 900 — Unit : mm

SIZE	FACE TO FACE	END TO END	APPROX
	A	B	H
2"	368	368	200
2½"	419	419	230
3"	381	381	250
4"	457	457	290
5"	559	559	320
6"	610	610	340
8"	737	737	400
10"	838	838	450
12"	965	965	520
14"	1029	1029	580
16"	1130	1130	620
18"	1219	1219	680

DIMENSION (mm) — "B" BUTT WELDING

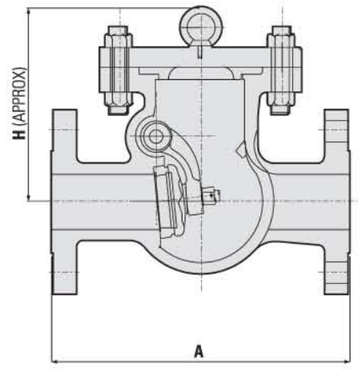

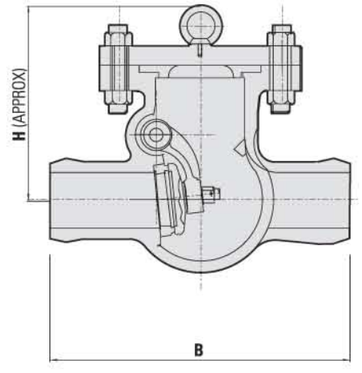

WATER SEAL VALVE

WATER SEALING TYPE

FEATURE

Water seal valve is available to design and manufacture according to **Maker standard**

FLANGE DIMENSION	KS B 1511, ASME B 16.5
FACE TO FACE DIMENSION	Maker standard
MATERIAL	
▪ BODY / BONNET / DISC	Carbon Steel, Ductile cast Iron
▪ SPINDLE	Carbon Steel
▪ SEAT	VITON, NBR, EPDM

TEST ITEM (SPEC : Maker Standard)

- Pressure Test

GENERAL APPLICATIONS

- Gas

SPECIFICATION

SIZE RANGE	200mm~3,000mm
PRESSURE CLASS	MAX 2kgf/cm²
OPERATING	Manual, Eletric, Pneumatic, Hydraulic

ADVANTAGE

- Complete shutoff (Zero Leakage)
- Safety (Double shut construction)
- In Case of Emergency, It's Shut off by Water seal
- Less Pressure Loss (Sphere Body)
- Less Trouble and Easy repair

PRESSURE TEST SPEC — TEST PRESSURE

Seat	MAX 1kgf/cm²
Body	MAX 1.5kgf/cm²

WATER SEAL PIPING DIAGRAM

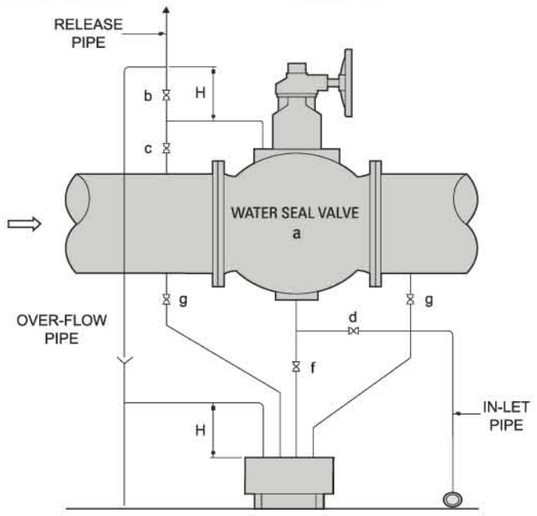

1. When Water Seal Valve being shut (inlet water)

NO	SYMBOL	VALVE'S NAME	STATE	REMARK
1	a	Water Seal Valve	Shut	
2	f	Drain Valve	Shut	
3	c	Gas Inlet Valve	Shut	
4	b	Overflow Valve	Open	Gas exhaust
5	d	Water Inlet Valve	Open	Inlet Water Start
6	d	Water Inlet Valve	a little Open	When the water it is dischanged being started from the overflow pipe, it closes the valve and it opens in small quantity.

2. When Water Seal Valve being open (draining)

NO	SYMBOL	VALVE'S NAME	STATE	REMARK
1	d	Water Inlet Valve	Shut	Inlet Water stop
2	b	Overflow Valve	Shut	
3	c	Gas Inlet Valve	Open	
4	f	Drain Valve	Open	Drain Start (even after drain completing in condition which is opened)
5	c	Gas Inlet Valve	Shut	after drain completing, It is shut.
6	a	Water Seal Valve	Open	after drain completing, full open.

* Drain Valve (g) is always open.

DIMENSIONS

Unit : mm

Size d	H1	H2	H	L	Weight (kg)	Flange Rating				
						D	C	T	h	n
200	720	227	947	420	200	320	280	24	23	8
250	916	249	1135	420	210	385	345	26	23	12
300	946	234	1180	480	240	430	390	28	23	12
350	991	284	1275	550	255	480	435	30	25	12
400	1082	309	1391	580	333	540	495	30	25	16
450	1122	354	1476	650	420	605	555	30	25	16
500	1142	381	1523	720	565	655	605	32	25	20
600	1219	431	1650	900	710	770	715	32	27	20
700	1427	535	1962	1000	1080	875	820	30	25	24
800	1483	589	2072	1150	1420	995	930	32	27	24
1000	1595	734	2329	1350	2020	1195	1130	34	27	28
1200	1720	824	2544	1740	3570	1420	1350	36	27	32
1300	1853	1030	2883	1800	3200	-	-	-	-	-
1350	1927	1050	2977	1900	3850	1575	1505	26	27	32
1400	2037	1150	3187	2000	3970	-	-	-	-	-
1500	2037	1150	3187	2000	4000	1730	1660	28	27	36
1600	2065	1300	3365	2150	4900	1790	1730	26	30	40
1800	2205	1448	3653	2500	6700	1990	1930	26	30	44
2000	2370	1550	3920	2700	8000	2190	2130	26	30	48
2200	2442	1720	4162	2900	10600	2405	2340	28	33	52
2400	2590	1850	4440	3240	13000	2605	2540	28	33	56
2600	2808	1980	4788	3400	16800	2805	2740	28	33	60
2800	3000	2080	5080	3700	19000	3030	2960	30	36	64
3000	3107	2250	5357	4000	24000	3230	3160	30	36	68
3400	3684	2589	6273	4400	35000	3760	3640	42	36	76

ELECTRIC TYPE

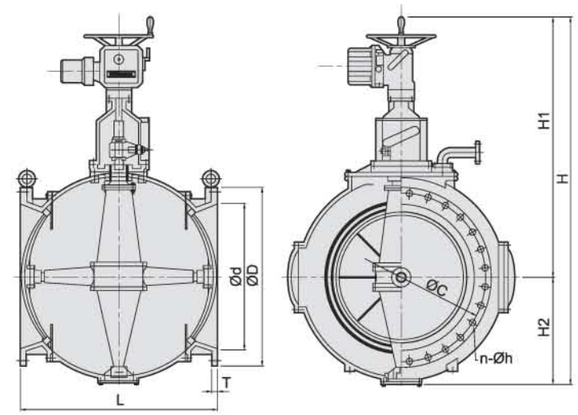

Unit : mm

Size d	H1	H2	H	L	Weight (kg)	Flange Rating				
						D	C	T	h	n
200	894	227	1121	420	268	320	280	24	23	8
250	983	262	1245	480	285	385	345	26	23	12
300	1445	234	1679	480	325	430	390	28	23	12
350	1481	284	1765	550	349	480	435	30	25	12
400	1552	309	1861	580	380	540	495	30	25	16
450	1597	354	1951	650	498	605	555	30	25	16
500	1778	381	2159	720	620	655	605	32	25	20
600	1833	431	2264	900	880	770	715	32	27	20
700	1848	534	2382	1000	1100	875	820	30	25	24
800	1904	589	2493	1150	1150	995	930	32	27	24
1000	2161	734	2895	1350	1350	1195	1130	34	27	28

NOTE Flange Rating is Maker Standard, but other standard are available on request.

PNEUMATIC TYPE

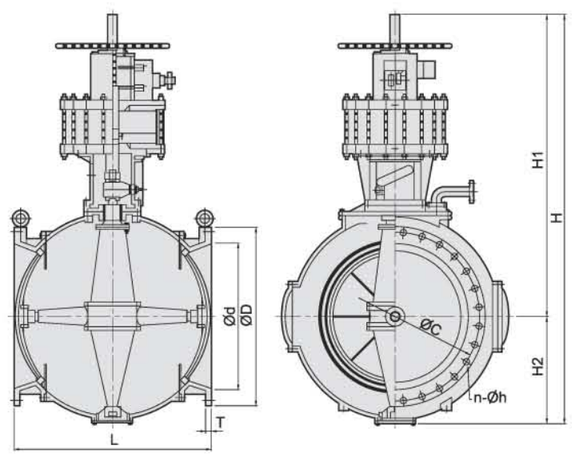

PLUG VALVE

METAL SEAT TYPE

FEATURE

Metal Seat Type Plug valve is available to design and manufacture according to **KS B 2335**

FLANGE DIMENSION	KS B 1511, ASME B 16.5
FACE TO FACE DIMENSION	API 6D, KS B 2306
MATERIAL	
▪ BODY / BONNET / PLUG	Carbon Steel, Stainless Steel + Hard Facing or Stellite

TEST ITEM (SPEC : API 6D, KS B 2304)

- Pressure Test

GENERAL APPLICATIONS

- Dust
- Sluge
- Coal

SPECIFICATION

SIZE RANGE	200A~1,000A
PRESSURE CLASS	150LB, 300LB, 600LB
MODEL	Eccentric, Double Eccentric
OPERATING	Manual, Eletric, Pneumatic, Hydralic

ADVANTAGE

- Excellent Abrasion Resistance
- High temprature compatibility
- Low torque

PRESSURE TEST SPEC (KS B 2335) — TEST PRESSURE

Seat	MPWP x 1.1 times
Body	MPWP x 1.5 times
	MPWP : Maximum Permissible Working Pressure

PATENT NO. 10-0632972. KOREAN INTELLECTUAL PROPERTY OFFICE

DIMENSION

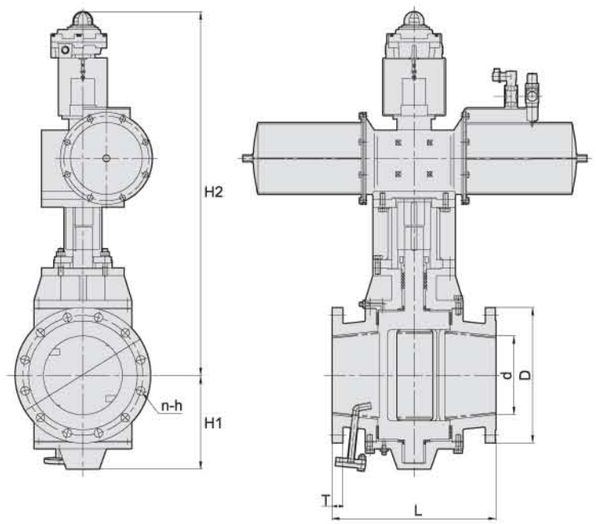

Unit : mm

	Size d	H1	H2	L	Flange Rating				
					D	C	T	h	n
DOUBLE ECCENTRIC METAL SEAT PLUG VALVE (PNEUMATIC)	200	271	1041	520	350	305	30	25	12
	250	296	1066	520	430	345	34	27	12
	300	342	1185	600	445	400	24	25	16

NOTE Flange Rating is Maker Standard, but other standard are available on request.

SLIDE GATE VALVE

RISER I DUMP DUCT I FEED LEG I DUMP LEG TYPE

FEATURE

Slide Gate valve is available to design and manufacture according to **Maker Standard**

FLANGE DIMENSION	ASME B16.5, DIN 2501
TEMPERATURE	MAX 850°C
FACE TO FACE DIMENSION	ASME B 16.10 or Customer Requirment
MATERIAL	
▪ BODY / DISC	Carbon Steel, Stainless Steel + Stellite
▪ STEM	Incoloy

TEST ITEM

- Pressure Test (Body Shell)
- NDT (RT, UT)

GENERAL APPLICATIONS

- Regenerated Catalyst
- Spent Catalyst
- Steam
- Hot Gas
- Fire-safe and Flammables

SPECIFICATION

SIZE RANGE	100mm ~1,500mm
PRESSURE CLASS	MAX 20kgf/cm²
MODEL	FLSGV, DLSGV, DDSGV, RSGV
OPERATING	Hydraulic

ADVANTAGE

- The inside configuration design which leads thermal variation analysis
- Outstanding performance & durability
- Optimum purging pipe system

PRESSURE TEST SPEC — TEST PRESSURE

Shell	Design Pressure x 1.5 times

PATENT NO. 10-1577709, 10-1577710. KOREAN INTELLECTUAL PROPERTY OFFICE

SLIDE GATE VALVE MAJOR PART

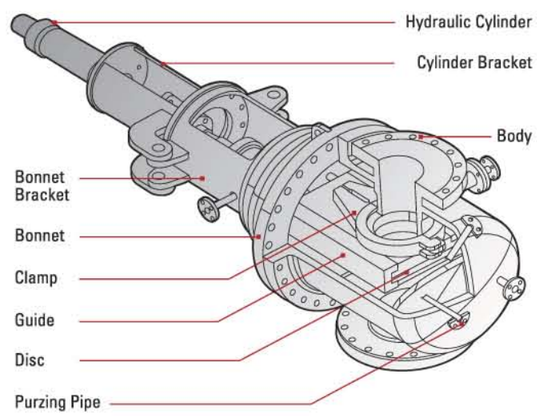

SLIDE GATE VALVE

DIMENSIONS

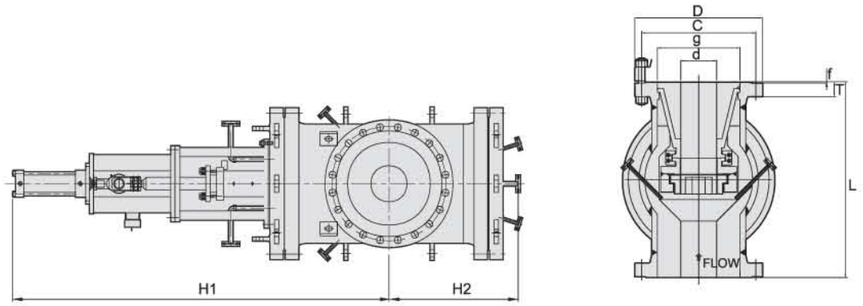

RISER SLIDE GATE VALVE (Hydraulic)
MODEL : **RSGV** series
SIZE : 250A

Size d	ϕg	ϕC	ϕD	L	H1	H2	T-f	Weight
250	575	795	890	1360	2656	898	102-6	7000kg

Unit : mm

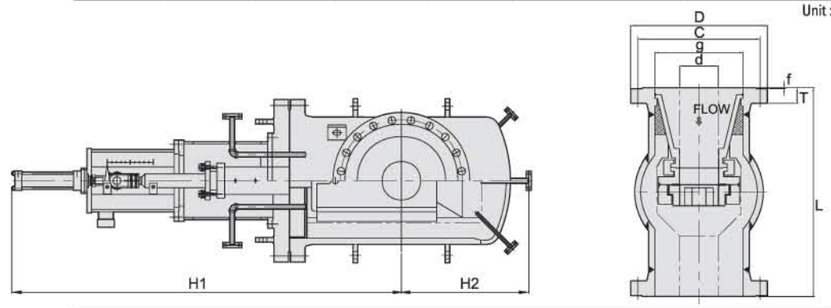

DUMP DUCT SLIDE GATE VALVE (Hydraulic)
MODEL : **DDSGV** series
SIZE : 250A

Size d	ϕg	ϕC	ϕD	L	H1	H2	T-f	Weight
250	575	795	890	1360	2535	830	102-6	7000kg

Unit : mm

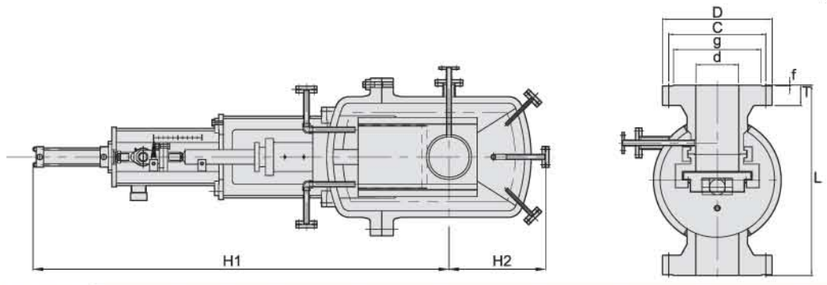

FEED LEG SLIDE GATE VALVE (Hydraulic)
MODEL : **FLSGV** series
SIZE : 250A

Size d	ϕg	ϕC	ϕD	L	H1	H2	T-f	Weight
250	515	570	645	1115	2560	650	116-5	3300kg

Unit : mm

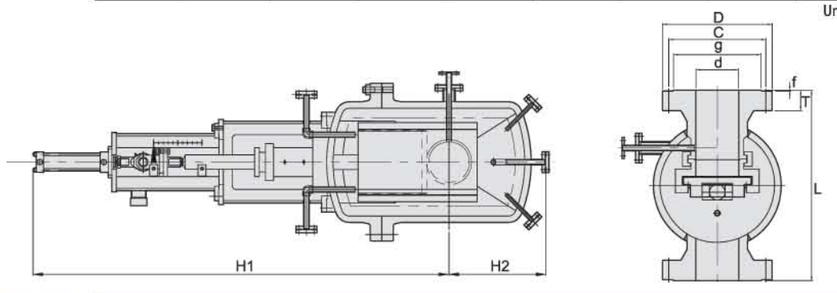

DUMP LEG SLIDE GATE VALVE (Hydraulic)
MODEL : **DLSGV** series
SIZE : 250A

Size d	ϕg	ϕC	ϕD	L	H1	H2	T-f	Weight
250	515	570	645	1115	2580	650	116-5	3300kg

Unit : mm

GLOBE CHECK VALVE

Y-PATTERN TYPE

FEATURE

Globe Check (y-pattern type) valve is available to design and manufacture according to **ASME B 16.34**

FLANGE DIMENSION	ASME B 16.5
BUTT WELDING DIMENSION	ASME B 16.25
FACE TO FACE DIMENSION	ASME 16.10

MATERIAL

▪ BODY	Carbon Steel
▪ POPPET / BONNET / SEATRING	Carbon Steel + Hard faced

TEST ITEM (SPEC : ASME B 16.34)

- Pressure Test (ACCORDING TO EACH CLASS)

GENERAL APPLICATIONS

- Steam

SPECIFICATION

SIZE RANGE	200mm ~2,000mm (Circular Type) 200mm ~4,000mm (Square rectangular Type)
PRESSURE CLASS	150LB, 300LB, 600LB 900LB, 1500LB
OPERATION	Manual

ADVANTAGE

- Stream Lined Flow Line
- Pressure Seal Design
- Live Loading Packing Design
- Packing Blow-Out Device
- Non Rotating Stem
- Efficient Backseat
- One Piece Disc
- Double Flanged End Connection
- Equalizing Pipe (optional)

PRESSURE TEST SPEC (ANSI B 16.34) — TEST PRESSURE

	BODY	SEAT	
	HYDRO	HYDRO	PNEUMATIC
CLASS 150	32kgf/cm²	22kgf/cm²	6kgf/cm²
CLASS 300	79kgf/cm²	57kgf/cm²	6kgf/cm²
CLASS 600	154kgf/cm²	115kgf/cm²	6kgf/cm²
CLASS 900	234kgf/cm²	172kgf/cm²	6kgf/cm²

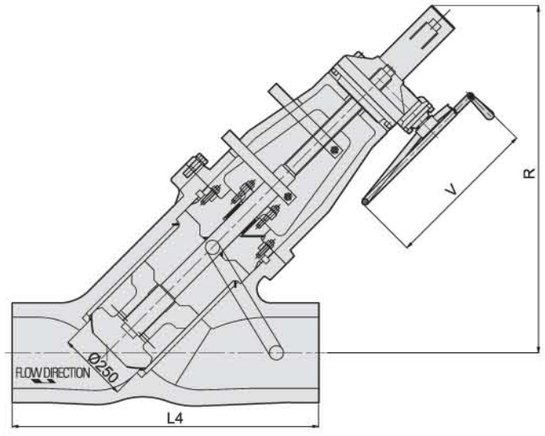

Unit : mm

SIZE	GLOBE STREAMLINE, Y TYPE CLASS 1500LB				GLOBE STREAMLINE, Y TYPE CLASS 900LB				GLOBE STREAMLINE, Y TYPE CLASS 600LB			
Inch	R	T	L4	V	R	T	L4	V	R	T	L4	V
5"	780	360	673	600	740	370	559	500	640	330	508	500
6"	890	410	705	700	870	420	610	600	700	380	559	500
8"	1160	535	832	800	1050	510	737	800	880	475	660	600
10"	1420	660	991	1000	1240	605	838	1000	1020	560	787	700
12"	1600	730	1130	1000	1470	715	965	1000	1100	625	838	800
14"	1680	770	1257	1000	1600	780	1029	1000	1230	690	889	1000
16"	1810	845	1384	1000	1810	850	1130	1000	1300	750	991	1000
18"	1920	880	1537	1000	2050	960	1219	1000	1420	850	1092	1000

NOTE Lay-length of valve is the dimension of ASME B 16.10, But other standards are avalible on request.

ISOLATION VALVE

GATE VALVE TYPE

FEATURE

Gate Valve for Blower Line of Blast Furnace is available to design and manufacture according to **Maker Standard.**

FLANGE DIMENSION	KS, JIS, ASME, DIN
FACE TO FACE DIMENSION	Maker Standard
MATERIAL	
▪ BODY	Cast Steel
▪ STEM	Stainless Steel
▪ SEAT	Stellite Overlay

TEST ITEM

- Pressure Test (ACCORDING TO EACH CLASS)

GENERAL APPLICATIONS

- Hot Air
- Steam
- Gas

SPECIFICATION

SIZE RANGE	500 ~ 1,600mm
PRESSURE CLASS	MAX 20kgf/cm²
MODEL	DGV, SGV, ISGV kgf/cm²
OPERATION	Electric, Hydraulic, Pneumatic
TEMPERATURE	MAX 300 ℃

DESCRIPTION

- Good operation under High Temperature condition
- Sealing in both directions
- Outstanding performance & durability

HOT BLAST VALVE

WATER COOLING TYPE

FEATURE

Hot Blast Valve is available to design and manufacture according to **Maker Standard.**

FLANGE DIMENSION	KS, JIS, ASME, DIN
FACE TO FACE DIMENSION	Maker Standard
MATERIAL	
▪ BODY	Cast Steel, Fabricated Steel
▪ DISC	Copper, Fabricated Steel
▪ STEM	Stainless Steel

TEST ITEM

- Pressure Test (ACCORDING TO EACH CLASS)

GENERAL APPLICATIONS

- Hot Air
- Steam
- Gas

SPECIFICATION

SIZE RANGE	500 ~ 3,000mm
PRESSURE CLASS	MAX 13kgf/cm²
MODEL	HSCV, HSEV
OPERATION	Hydraulic, Electric
TEMPERATURE	1000 ~ 1,400 ℃

DESCRIPTION

- High energy saving efficiency
- Low maintenance cost
- Water-cooled construction
- Refractory lining to the trim
- Various Valve actuation
- Sealing in both directions

COPPER TYPE

ENERGY SAVING TYPE

GOGGLE VALVE

OPEN | ENCLOSED TYPE

FEATURE

Goggle Valve is available to design and manufacture according to **Maker Standard.**

FLANGE DIMENSION	KS, JIS, ASME, DIN
FACE TO FACE DIMENSION	Maker Standard
MATERIAL	
▪ BODY / DISC	Carbon Steel
▪ STEM	Viton, NBR. EPDM, Silicon

TEST ITEM

- Pressure Test (ACCORDING TO EACH CLASS)

GENERAL APPLICATIONS

- Reducing Gas (50%CO, 20% H2, ETC)
- Hot Air
- Gas

SPECIFICATION

SIZE RANGE	300 ~ 5,000mm
PRESSURE CLASS	MAX 6.0kgf/cm²
TYPE	Open Type, Enclosed Type
MODEL	ISV, OSV, HGRV
OPERATION	Manual, Electric, Hydraulic
TEMPERATURE	MAX 700 °C

DESCRIPTION

- 100% Gas Tight
- Short closing and opening time
- Free-moving and insusceptible from dust
- Low maintenance requirement
- No wear to the seals and sealing surfaces

BLOW OFF VALVE

DOUBLE SEAT GLOBE TYPE

FEATURE

This globe type blow off valve is equipped with Double disc globe structure.

FLANGE DIMENSION	KS, JIS, ASME, DIN
FACE TO FACE DIMENSION	Maker Standard
MATERIAL	
▪ BODY	Cast Iron/Cast Steel
▪ DISC	Stainless Steel
▪ STEM	Overlay

TEST ITEM

- Pressure Test (ACCORDING TO EACH CLASS)

GENERAL APPLICATIONS

- Hot Air
- Steam
- Gas

SPECIFICATION

SIZE RANGE	300 ~ 1,500mm
PRESSURE CLASS	MAX 10kgf/cm²
MODEL	SBOV, BOV
OPERATION	Hydraulic, Manual, Pneumatic
TEMPERATURE	MAX 450 °C

DESCRIPTION

- Outstanding control performance
- Linear flow control type
- Minimum thermal strain design
- Gas tight performance under high temperature
- Minimize the hydraulic cylinder size

New Technology Innovative Thinking Long-Term Reliable Quality

DATA SHEET

CONTROL VALVE SEAT LEAKAGE CLASSIFICATION (ANSI B 16.104)

RUBBER SEAT MATERIALS

COMPARISON LIST FOR CASTING & FORGING

STEEL PIPE FLANGE

PRESSURE - TEMPERATURE RATINGS

BUTTWELDING END DETAIL

TECHNICAL CONVERSION TABLE

GASKET MATERIALS & CONSTRUCTION

PACKING MATERIAL & CONSTRUCTION

MATERIAL SELECTION

Control Valve Seat Leakage Classification (ANSI B 16.104)

Leakage Class Designation	Maximum Leakage Allowable	Test Medium	Test Pressure	Testing Procedures Required for Establishing Rating
I	-	-	-	No test required provided user and supplier so agree
II	0.5% of rated capacity	Air or water at 50-125F (10-52C)	45-60 psig or max.operating differential whichever is lower	Pressure applied to valve inlet with outlet open to atmosphere or connected to a low head loss measuring device full normal closing thrust provided by actuator
III	0.1% of rated capacity	As above	As above	As above
IV	0.01% of rated capacity	As above	As above	As above
V	0.0005ml perminute of water per inch of port diameter per psi differential	Water at 50 to 125F (10 to 52C)	Max service pressure Drop across valve plug, Not to exceed ANSI body rating (100 psi pressure drop minimum)	Pressure applied to valve inlet after filling entire body cavity and connected piping with water and stroking valve plug closed. Use net specified max actuator thrust, but no more, even if available during test. Allow time for leakage flow to stabilize and use suitable measuring device.
VI	Not to exceed amounts shown in following table based on port diameter	Air or nitrogen at 50 to 125F (10 to 52C)	50 psig or max rated differential pressure across valve plug whicherver is lower	Actuator should be adjusted to operating conditions specified with full normal closing thrust applied to valve plug seat. Allow time for leakage flow to stabilize and use suitable measuring device.

RUBBER SEAT MATERIALS

Feature of Rubber

Common Name	ASTM code	Max. Temp.	Abrasion	Aging	Sun Light Resistance	Water Resistance	Oil Resistance	Solvent	Strong Acid	Weak Acid	Strong Alkali	Weak Alkali
Buna-N	NBR	90°C	◎	◎	○	◎	◎	△	×	○	○	◎
Neoprene	CR	90°C	◎	◎	◎	◎	○	×	×	○	○	◎
Nature Rubber	NR	65°C	◎	○	○	◎	×	×	×	○	○	◎
EPT	EPDM(EPT)	120°C	○	◎	◎	◎	×	×	○	◎	◎	◎
Silicon	SI	150°C	○	◎	◎	○	×	△	×	○	○	◎
Viton	FPM	150°C	○	◎	◎	◎	◎	○	◎	◎	◎	◎

◎ excellent ○ good △ fair × poor

Rubber Seat Materials Selection Table

Fluid	Temp. (°C)	NBR	CR	NR	EPT	Si	FPM
Sea Water	90℃	○	○	○	○	○	○
Sewage	RT	○	○	○	○	-	-
Steam	120℃	△	△	×	○	△	○
Water	90℃	○	○	○	○	○	○
Alcohol	RT	○	○	○	○	○	○
Ammonia Gas	RT	△	○	○	○	-	×
Ammonia Liquid (30%)	RT	○	○	○	○	-	×
Caustic Soda (50%)	RT	○	○	○	○	-	○
Chlorine (dry)	RT	×	×	×	×	×	○
Chlorine (wet)	RT	×	×	×	×	×	△
Hydro Chloric Acid (10%)	RT	○	○	○	○	○	○
Nitric Acid (10%)	RT	△	○	×	×	×	○
Sulfuric Acid (10%)	RT	△	○	○	○	○	○
Sulfuric Acid (10%)	65℃	△	○	○	○	○	○
Sulfuric Acid (30%)	RT	△	○	○	○	○	○
Fuel Oil	RT	○	×	×	×	×	○
Gasoline	RT	×	×	×	×	×	△
Heavy Oil	RT	○	×	×	×	×	○
Lubricating Oil	70℃	○	×	×	×	×	○
Naphtha	RT	△	×	×	×	×	○
Tar	RT	×	×	×	×	×	○
Blast Furnace Gas	RT	○	○	×	×	×	○
Carbonic Acid Gas	RT	○	○	○	○	○	○
Coke Oven Gas	RT	×	×	×	×	×	○
Nature Gas	RT	○	○	×	×	×	○
Oxygen	RT	×	△	×	○	○	○
Sulfurous Acid Gas	RT	○	○	×	×	×	○

○ suitable △ suitable in case × not suitable

General classification	CASTINGS			FORGINGS		
	ASTM	JIS	BS	ASTM	JIS	BS
Cast Iron	A216 - Class A	G5501 - FC20	1452 - 14	-	-	-
	- Class B	- FC25	- 17	-	-	-
	- Class C	- FC30	- 20	-	-	-
Malleable Iron	A197	G5702 - FCMB28	310 - B18/6	-	-	-
	A 47 - 32510	- FCMB35	- B22/14	-	-	-
	- 35018	- FCMB37	-	-	-	-
Ductile Iron	A395	G5502 - FCD40	-	-	-	-
	-	- FCD45	-	-	-	-
	A536	- FCD55	-	-	-	-
Carbon Steel	A216 - WCA	G5151 - SCPH1	-	A105	G3201 - SF45	1503 - 161B
	-	G5101 - SC46	1504 - 161	-	-	-
	A216 - WCB	G5151 - SCPH2	- B	A105	G3201 - SF50	1503 - 161C
	- WCC		-	-	-	-
	-	G5101 - SC55	- C	-	-	-
Carbon-1/2 Mo	A217 - WC1	G5111 - SCA41	1504 - 240	A182 - F1	-	1503 - 240B
1/2 Cr-1/2 Mo1/2 Ni	- WC4	-	-	-	-	-
1Cr-1/2 Mo-1/2 Ni	- WC5	-	-	A182 - F12	-	1503 - 620
11/4 Cr-1/2 Mo	- WC6	G5111 - SCA51	1504 - 621	- F11	-	-
21/4 Cr-1Mo	- WC9	-	1504 - 622	- F22	-	1503 - 622
3Cr-1Mo	-	-	-	- F21	-	-
5Cr-1/2 Mo(C0.15)	-	-	-	- F5	-	-
5Cr-1/2 Mo(C0.25)	A217 - C5	G5111 - SCA52	1504 - 625	- F5a	-	1503 - 625
7Cr-1/2 Mo	-	-	-	- F7	-	-
9Cr-1Mo	A217 - C12	-	1504 - 629	- F9	-	-
Carbon Steel for Low Temp	A352 - LCB	-	4242 - GRA	A350 - LF1	-	-
Carbon-Si	-	-	-	- LF2	-	-
Carbon-1Mo for Low Temp	A352 - LC1	-	-	-	-	-
21/2 Ni	- LC2	-	-	-	-	-
31/2 Ni	- LC3	-	-	A350 - LF3	-	-
Cr-Ni-Cu-Al	-	-	-	- LF4	-	-
13Cr	A217 - CA15	G51212 - SCS1	-	A182 - F6	G4303 - SUS51B	1503 - 713
18Cr-8Ni(C0.03)	A351 - CF3	-	-	- F304L	- SUS28B	-
18Cr-8Ni(C0.08)	- CF8	G5121 - SCS13	-	- F304	- SUS27B	1503 - 801
18Cr-8Ni(C0.10)	-	-	1504 - 801	- F304H	-	-
18Cr-8Ni-2Mo(C0.03)	A351 - CF3M	G5121 - SCS16	-	- F316L	G4303 - SUS33B	-
18Cr-8Ni-2Mo(C0.08)	- CF8M	- SCS14	1632 - GRC	- F316	- SUS32B	1503 - 845B
18Cr-8Ni-2Mo(C0.10)	-	-	-	- F316H	-	-
18Cr-8Ni-Ti(C0.08)	-	-	-	- F321	G4303 - SUS29B	-
18Cr-8Ni-Ti(C0.10)	-	-	1504 - 821Ti	-	- F321H	1503 - 821TI
18Cr-8Ni-Cb(C0.08)	A351 - CF8C	-	-	- F347	G4303 - SUS43B	- 821Nb
18Cr-8Ni-Cb(C0.10)	-	-	1504 - 821Nb	- F347H	-	-
18Cr-8Ni-Ta-Cb(C0.08)	-	-	-	- F348	-	-
18Cr-8Ni-Ta-Cb(C0.10)	-	-	-	- F348H	-	-
25Cr-2Ni(C0.15)	-	-	-	- F310	-	-
22Cr-12Ni(C0.08)	A351 - CH18	-	-	-	-	-
22Cr-12Ni(C0.10)	- CH10	-	-	-	-	-
22Cr-12Ni(C0.20)	- CH20	-	-	-	-	-
23Cr-19Ni(C0.20)	- CK20	-	-	-	-	-
23Cr-19Ni(C0.35)	- HK30	-	-	-	-	-
23Cr-19Ni(C0.45)	- HK40	-	-	-	-	-
13Cr-33Ni-Mo(C0.35)	- HT30	-	-	-	-	-
15Cr-13Ni-2Mo-Cb(C0.10)	CF10MC	-	-	-	-	-
19Cr-27Ni-2Mo-3Cu(C0.07)	- CN7M	-	-	-	-	-
8Cr-20Ni(C0.20)	-	-	-	A182 - F10	-	-
HASTELLOY B	A494-N-12MV	-	-	-	-	-

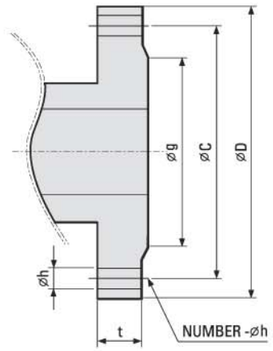

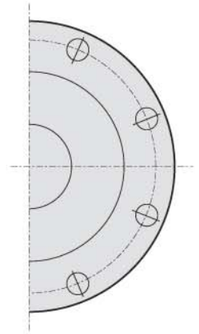

ANSI B16.5 CLASS 150 (mm)

Nominal Size (Inches)	D	C	g	f	h	Bolt	
						NUMBER	DIAM.
1/2	88.9	60.5	35.1	11.2	15.8	4	1/2
3/4	98.6	69.9	42.9	12.7 (11.2)	15.8	4	1/2
1	108.0	79.2	50.8	14.3 (11.2)	15.8	4	1/2
1 1/2	127.0	98.6	73.2	17.6 (14.3)	15.8	4	1/2
2	152.4	120.7	91.9	19.1 (15.8)	19.1	4	5/8
2 1/2	177.8	139.7	104.6	22.4 (17.6)	19.1	4	5/8
3	190.5	152.4	127.0	23.9 (19.1)	19.1	4	5/8
4	228.6	190.5	157.2	23.9	19.1	8	5/8
5	254.0	215.9	185.7	23.9	22.4	8	3/4
6	279.4	241.3	215.9	25.4	22.4	8	3/4
8	342.9	298.5	269.7	28.5	22.4	8	3/4
10	406.4	362.0	323.9	30.3	25.4	12	7/8
12	482.6	431.8	381.0	31.8	25.4	12	7/8
14	533.4	476.3	412.8	35.1	28.4	12	1
16	596.9	539.8	469.9	36.6	28.4	16	1
18	635.0	577.9	533.4	39.7	31.8	16	1 1/8
20	698.5	635.0	584.2	43.0	31.8	20	1 1/8
24	812.8	749.3	692.2	47.8	35.1	20	1 1/4

Includes 1.6 raised face. Dimensions in ( ) are for valve flanges.

ANSI B16.5 CLASS 300 (mm)

Nominal Size (Inches)	D	C	g	f	h	Bolt	
						NUMBER	DIAM.
1/2	95.3	66.5	35.1	14.3	15.8	4	1/2
3/4	117.3	82.6	42.9	15.8	19.1	4	1/2
1	124.0	88.9	5038	17.6	19.1	4	1/2
1 1/2	155.4	114.3	73.2	20.6	22.4	4	1/2
2	165.1	127.0	91.9	22.4	19.1	8	5/8
2 1/2	190.5	149.4	104.6	25.4	22.4	8	5/8
3	209.6	168.1	127.0	28.5	22.4	8	5/8
4	254.0	200.2	157.2	31.8	22.4	8	5/8
5	279.4	235.0	185.7	35.1	22.4	8	3/4
6	317.5	269.7	215.9	36.6	22.4	12	3/4
8	381.0	330.2	269.7	41.2	25.4	12	3/4
10	444.5	387.4	323.9	47.8	28.4	16	7/8
12	520.7	450.9	381.0	50.8	31.8	16	7/8
14	584.2	514.4	412.8	53.9	31.8	20	1
16	647.7	571.5	469.9	57.2	35.1	20	1
18	711.2	628.7	533.4	60.5	35.1	24	1 1/8
20	774.7	685.8	584.2	63.5	35.1	24	1 1/8
24	914.4	812.8	692.2	69.9	41.2	24	1 1/4

Includes 1.6 raised face.

ANSI B16.5 CLASS 600 (mm)

Nominal Size (Inches)	D	C	g	f	h	Bolt	
						NUMBER	DIAM.
1/2	95.3	66.5	44.5	14.3	15.8	4	1/2
3/4	117.3	82.6	52.3	15.8	19.1	4	5/8
1	124.0	88.9	57.2	17.6	19.1	4	5/8
1 1/2	155.4	114.3	73.2	22.4	22.4	4	3/4
2	165.1	127.0	91.9	25.4	19.1	8	5/8
2 1/2	190.5	149.4	104.6	28.5	22.4	8	3/4
3	209.6	168.1	127.0	31.8	22.4	8	3/4
4	273.1	215.9	157.2	38.1	25.4	8	7/8
5	330.2	266.7	185.7	44.5	28.4	8	1
6	355.6	292.1	215.9	47.8	28.4	12	1
8	419.1	349.3	269.7	55.7	31.8	12	1 1/8
10	508.0	431.8	323.9	63.5	35.1	16	1 1/4
12	558.8	489.0	381.0	66.6	35.1	20	1 1/4
14	603.3	527.1	412.8	69.9	38.1	20	1 3/8
16	685.8	603.3	469.9	76.2	41.2	20	1 1/2
18	743.0	654.1	533.4	82.6	44.5	20	1 5/8
20	812.8	723.9	584.2	88.9	44.5	24	1 5/8
24	939.8	838.2	692.2	101.6	50.8	24	1 7/8

6.4 raised face not included.

ANSI B16.5 CLASS 900 (mm)

Nominal Size (Inches)	D	C	g	f	h	Bolt	
						NUMBER	DIAM.
1/2	120.7	82.6	44.5	22.4	22.4	4	3/4
3/4	130.0	88.9	52.3	25.4	22.4	4	3/4
1	149.4	101.6	57.2	28.5	25.4	4	7/8
1 1/2	177.8	124.0	73.2	31.8	28.4	4	1
2	215.9	165.1	91.9	38.1	25.4	8	7/8
2 1/2	244.3	190.5	104.6	41.2	28.4	8	1
3	241.3	190.5	127.0	38.1	25.4	8	7/8
4	292.1	235.0	157.2	44.5	31.8	8	1 1/8
5	349.3	279.4	185.7	50.8	35.1	8	1 1/4
6	381.0	317.5	215.9	55.7	31.8	12	1 1/8
8	469.9	393.7	269.7	63.5	38.1	12	1 3/8
10	546.1	469.9	323.9	69.9	38.1	16	1 3/8
12	609.6	533.4	381.0	79.3	38.1	20	1 3/8
14	641.4	558.8	412.8	85.9	41.2	20	1 1/2
16	704.9	616.0	469.9	89.9	44.5	20	1 5/8
18	787.4	685.8	533.4	101.6	50.8	20	1 7/8
20	857.3	749.3	584.2	108.0	53.9	20	2
24	1041.4	901.7	692.2	139.7	66.6	20	2 1/2

6.4 raised face not included.

PRESSURE - TEMPERATURE RATINGS

WORKING PRESSURE. PSIG

CLASS	TEMP °F	A216WCB A105	A217C5 A182 F5a	A217WC6 A182 F11	A217WC9 A182 F22	A352 LC3 A350 LF3	A351CF8M A182 F315	A351CF3M	A351 CF8 A182 F304	A351 CF3
CLASS 150	-20 to 100℃	285	290	290	290	290	275	275	275	275
	200	260	260	260	260	260	240	240	235	235
	300	230	230	230	230	230	215	215	205	205
	400	200	200	200	200	200	195	195	180	180
	500	170	170	170	170	170	170	170	170	170
	600	140	140	140	140	140	140	140	140	140
	650	125	125	125	125	125	125	125	125	125
	700	110	110	110	110	-	110	110	110	110
	750	95	95	95	95	-	95	95	95	95
	800	80	80	80	80	-	80	80	80	80
	850	65	65	65	65	-	65	65	65	-
	900	50	50	50	50	-	50	-	50	-
	950	35	35	35	35	-	35	-	35	-
	1000	20	20	20	20	-	20	-	20	-
	1050	-	20	20	20	-	20	-	20	-
	1100	-	20	20	20	-	20	-	20	-
	1150	-	20	-	-	-	20	-	20	-
	1200	-	20	-	-	-	20	-	20	-
	1250	-	-	-	-	-	20	-	20	-
	1300	-	-	-	-	-	20	-	20	-
	1350	-	-	-	-	-	20	-	20	-
	1400	-	-	-	-	-	20	-	20	-
	1450	-	-	-	-	-	20	-	15	-
	1500	-	-	-	-	-	15	-	10	-
CLASS 300	-20 to 100℃	740	750	750	750	750	720	720	720	720
	200	675	750	710	715	750	620	620	600	600
	300	655	730	675	675	730	560	560	530	530
	400	635	705	660	650	705	515	515	470	470
	500	600	665	640	640	685	480	480	435	435
	600	550	605	605	605	605	450	450	415	415
	650	535	590	590	590	590	445	445	410	410
	700	535	570	570	570	-	430	430	405	405
	750	505	530	530	530	-	425	425	400	400
	800	410	500	510	510	-	415	415	395	395
	850	270	440	485	485	-	405	405	390	-
	900	170	355	460	450	-	395	-	385	-
	950	105	260	380	380	-	385	-	375	-
	1000	50	190	225	270	-	365	-	325	-
	1050	-	140	140	200	-	360	-	310	-
	1100	-	105	95	115	-	325	-	260	-
	1150	-	70	-	-	-	275	-	195	-
	1200	-	45	-	-	-	205	-	155	-
	1250	-	-	-	-	-	180	-	110	-
	1300	-	-	-	-	-	140	-	85	-
	1350	-	-	-	-	-	105	-	60	-
	1400	-	-	-	-	-	75	-	50	-
	1450	-	-	-	-	-	60	-	35	-
	1500	-	-	-	-	-	40	-	25	-
CLASS 600	-20 to 100℃	1480	1500	1500	1500	1500	1440	1440	1440	1440
	200	1350	1500	1425	1430	1500	1240	1240	1200	1200
	300	1315	1455	1345	1355	1455	1120	1120	1055	1055
	400	1270	1410	1315	1295	1410	1030	1030	940	940
	500	1200	1330	1285	1280	1330	955	955	875	875
	600	1095	1210	1210	1210	1210	905	905	830	830
	650	1075	1175	1175	1175	1175	890	890	815	815
	700	1065	1135	1135	1135	-	885	865	805	805
	750	1010	1065	1065	1065	-	845	845	795	795
	800	825	995	1015	1015	-	830	830	790	790
	850	535	880	975	975	-	810	810	780	-
	900	345	705	900	900	-	790	-	770	-
	950	205	520	755	755	-	775	-	750	-
	1000	105	385	445	535	-	725	-	645	-
	1050	-	280	275	400	-	720	-	620	-
	1100	-	205	190	225	-	645	-	515	-
	1150	-	140	-	-	-	550	-	390	-
	1200	-	90	-	-	-	410	-	310	-
	1250	-	-	-	-	-	365	-	220	-
	1300	-	-	-	-	-	275	-	165	-
	1350	-	-	-	-	-	205	-	125	-
	1400	-	-	-	-	-	150	-	95	-
	1450	-	-	-	-	-	115	-	70	-
	1500	-	-	-	-	-	85	-	50	-

HYDROSTATIC TEST PRESSURES IN POUNDS PER SQUARE INCH GAUGE (psig)

CLASS 150	SHELL	450	450	450	450	400	375	375	375	375
	SEAT	315	315	315	315	290	260	260	260	260
CLASS 300	SHELL	1125	1125	1125	1125	1050	925	925	925	925
	SEAT	815	825	825	825	765	675	675	675	675
CLASS 600	SHELL	2225	2250	2250	2250	2100	1875	1875	1875	1875
	SEAT	1630	1650	1650	1650	1530	1360	1360	1360	1360

WORKING PRESSURE. PSIG

CLASS	TEMP °F	A216WCB A105	A217C5 A182 F5a	A217WC6 A182 F11	A217WC9 A182 F22	A352 LC3 A350 LF3	A351CF8M A182 F315	A351CF3M	A351 CF8 A182 F304	A351 CF3
CLASS 900	-20 to 100℃	2220	2250	2250	2250	2250	2160	2160	2160	2160
	200	2025	2250	2135	2150	2250	1860	1850	1800	1800
	300	1970	2185	2020	2030	2185	1540	1540	1410	1410
	400	1900	2115	1975	1945	2115	1540	1540	1410	1410
	500	1795	1995	1925	1920	1995	1435	1435	1310	1310
	600	1640	1815	1815	1815	1815	1355	1355	1245	1245
	650	1610	1765	1765	1765	1765	1330	1330	1225	1225
	700	1600	1705	1705	1705	-	1295	1295	1210	1210
	750	1510	1595	1595	1595	-	1270	1270	1195	1195
	800	1235	1490	1525	1525	-	1245	1245	1180	1180
	850	850	1315	1460	1460	-	1215	1215	1165	-
	900	515	1060	1350	1350	-	1180	-	1150	-
	950	310	780	1130	1130	-	1160	-	1125	-
	1000	155	575	670	805	-	1090	-	965	-
	1050	-	420	410	595	-	1080	-	925	-
	1100	-	310	290	340	-	965	-	770	-
	1150	-	205	-	-	-	825	-	585	-
	1200	-	135	-	-	-	620	-	465	-
	1250	-	-	-	-	-	545	-	330	-
	1300	-	-	-	-	-	410	-	245	-
	1350	-	-	-	-	-	310	-	185	-
	1400	-	-	-	-	-	225	-	145	-
	1450	-	-	-	-	-	175	-	105	-
	1500	-	-	-	-	-	125	-	70	-
CLASS 1500	-20 to 100℃	3750	3750	3750	3750	3750	3600	3600	3600	3600
	200	3375	3750	3560	3580	3750	3095	3095	3000	3000
	300	3280	3640	3365	3385	3640	2795	2795	2640	2640
	400	3170	3530	3290	3240	3530	2570	2570	2350	2350
	500	2995	3325	3210	3200	3325	2390	2390	2185	2185
	600	2735	3025	3025	3025	3025	2255	2255	2075	2075
	650	2685	2940	2940	2940	2940	2220	2220	2040	2040
	700	2665	2840	2840	2840	-	2160	2160	2015	2015
	750	2520	2660	2660	2660	-	2110	2110	1990	1990
	800	2060	2485	2540	2540	-	2075	2075	1970	1970
	850	1340	2195	2435	2435	-	2030	2030	1945	-
	900	860	1765	2245	2245	-	1970	-	1920	-
	950	515	1305	1885	1885	-	1930	-	1870	-
	1000	260	960	1115	1340	-	1820	-	1610	-
	1050	-	705	685	995	-	1800	-	1545	-
	1100	-	515	480	565	-	1610	-	1285	-
	1150	-	345	-	-	-	1370	-	980	-
	1200	-	225	-	-	-	1030	-	770	-
	1250	-	-	-	-	-	910	-	550	-
	1300	-	-	-	-	-	685	-	410	-
	1350	-	-	-	-	-	515	-	310	-
	1400	-	-	-	-	-	380	-	240	-
	1450	-	-	-	-	-	290	-	170	-
	1500	-	-	-	-	-	205	-	120	-
CLASS 2500	-20 to 100℃	6170	6250	6250	6250	6250	6000	6000	6000	6000
	200	5625	6250	5930	5965	6250	5160	5160	5000	5000
	300	5470	6070	5605	5640	6070	4660	4660	4400	4400
	400	5280	5880	5485	5400	5880	4280	4280	3920	3920
	500	4990	5540	5350	5330	5540	3980	3980	3640	3640
	600	4560	5040	5040	5040	5040	3760	3760	3460	3460
	650	4475	4905	4905	4905	4905	3700	3700	3400	3400
	700	4440	4730	4730	4730	-	3600	3600	3360	3360
	750	4200	4430	4430	4430	-	3520	3520	3320	3320
	800	3430	4145	4230	4320	-	3460	3450	3280	3280
	850	2230	3660	4060	4060	-	3320	3320	3240	-
	900	1430	2945	3745	3745	-	3280	-	3200	-
	950	860	2170	3145	3145	-	3220	-	3120	-
	1000	430	1600	1860	2230	-	3030	-	2685	-
	1050	-	1170	1145	1660	-	3000	-	2570	-
	1100	-	860	800	945	-	2685	-	2145	-
	1150	-	570	-	-	-	2285	-	1630	-
	1200	-	370	-	-	-	1715	-	1285	-
	1250	-	-	-	-	-	1515	-	915	-
	1300	-	-	-	-	-	1145	-	685	-
	1350	-	-	-	-	-	860	-	515	-
	1400	-	-	-	-	-	630	-	400	-
	1450	-	-	-	-	-	485	-	285	-
	1500	-	-	-	-	-	345	-	200	-

HYDROSTATIC TEST PRESSURES IN POUNDS PER SQUARE INCH GAUGE (psig)

CLASS 900	SHELL	3350	3375	3375	3375	3150	2775	2775	2775	2775
	SEAT	2440	2475	2475	2475	2295	2035	2035	2035	2035
CLASS 1500	SHELL	5575	5629	5625	5625	5225	4650	4650	4650	4650
	SEAT	4075	4125	4125	4125	3815	3395	3395	3395	3395
CLASS 2500	SHELL	9275	9375	9375	9375	8700	7725	7725	7725	7725
	SEAT	6785	6875	6875	6875	6365	5660	5660	5660	5660

BUTTWELDING END DETAIL

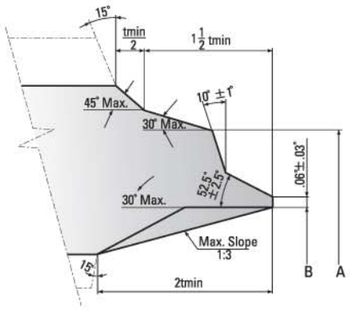

Compound Bevel

CONNECTION PIPE WALL THICKNESS
LARGER Than 7/8" SIZE

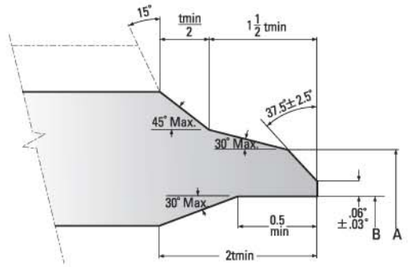

Plain Bevel

CONNECTION PIPE WALL THICKNESS
7/8" And SMALLER SIZE

VALVE SIZE	2" ~ 10"	10" ~ 12"	20" ~ 24"
A	+0 -0.8		
B	±0.8	±1.6	+3.2 -1.6

A = Outside diameter of matching pipe, wrought or fabricated component
B = Nominal inside diameter
t = Min. wall thickness

TECHNICAL CONVERSION TABLE

Flow Rate Conversion Formulas

Conversion To m^3/h		
	m^3/h	Gas m^3/h (at 15℃ 1013mmbar)
Gas m^3/h	-	× [A]
Gas m^3/h (at 15℃ 1013mmbar)	× [B]	-
kg/h	÷ SG × 0.001	×23.83 ÷ MW
kl/h	-	× [A]
t/h	÷ SG	× 1000 × 23.83 ÷ MW
ℓ/h	× 0.001	× 0.001 × [A]
ℓ/min	× 0.001 × 60	× 0.001 × 60 × [A]
t/min	÷ SG × 60	× 60 × 1000 × 23.63 ÷ MW
Lb/h	× 0.4536 ÷ SG × 0.001	× 0.4536 × 23.63 ÷ MW
CFH (ft^3/h)	× 0.02832	× 0.02832 × [A]
SCFH (Nft^3/h)	× 0.0282 × [B]	× 0.02832
BBL/h	× 0.159	× 0.159 × [A]
BBL/min	× 0.159 × 60	× 0.159 × 60 × [A]
GPM (gallon/min)	× 3.785 × 0.001 × 60	× 3.785 × 0.001 × 60 × [A]
CFM (ft^3/min)	× 0.02832 × 60	× 0.02832 × 60 × [A]
SCFM	× 0.02832 × 60 × [B]	× 0.02832 × 60
N m^3/h (at 0℃ 1013mmbar)	× T1 × 1.033 ÷ (P1 × 273)	× 288 ÷ 273

[A] = P1 × 288 ÷ (T1 × 1.033)
[B] = T1 × 1.033 ÷ (P1 × 288)
SG = Specific Gravity
P1 = kgf/㎠A inlet pressure
T1 = K Fluid Temperature(℃)
MW = Molecular Weight

Pressure Unit Conversion Formulas

Conversion To kgf/㎠A	
kgf/㎠G	+1.033
Bar G	×1.020+1.033
Bar A	×1.020
mmH2O · mmAq	×0.0001+1.033
mmHg · Torr	÷735.6
cmH2O · cmAq	×0.001+1.033
cmHg	÷73.56
mH2O · mAq	×0.1+1.033
atm	×1.033
atg	+1.033
Pa	×0.0000102+1.033
KPa G	×0.0102+1.033
KPa A	×0.0102
MPa G	×0.0102+1.033
MPa A	×10.20
Lb/in² G	×0.0703+1.033
Lb/in² A	×0.0703
psi G	×0.0703+1.033
psi A	×0.0703
inHg	×25.40÷735.6

TECHNICAL CONVERSION TABLE

Temperature Unit Conversion

℃	℉℃	– ℉
-28.9	-20	-4.5
-26.1	-15	-5.0
-23.3	-10	14.0
-20.6	-5	23.0
-17.8	0	32.0
-15.0	5	41.0
-12.2	10	50.0
-9.4	15	59.0
-6.7	20	68.0
-3.9	25	77.0
-1.1	30	86.0
1.7	35	95.0
4.4	40	104.0
7.2	45	113.0
10.0	50	122.0
12.8	55	131.0
15.6	60	140.0
18.3	65	149.0
21.1	70	158.0
23.9	75	167.0
26.7	80	176.0
29.4	85	185.0
32.2	90	194.0
35.0	95	203.0
37.8	100	212.0
43.3	110	230.0
48.9	120	248.0
54.4	130	266.0
60.0	140	284.0
65.6	150	302.0
71.1	160	320.0
76.7	170	338.0
82.2	180	356.0
87.8	190	374.0
93.3	200	392.0
98.9	210	410.0
104.4	220	428.0
110.0	230	446.0
121.1	250	482.0
148.9	300	572.0
176.7	350	662.0
204.4	400	752.0
232.2	450	842.0
260.0	500	932.0
315.6	600	1112.0
317.0	700	1292.0

Temperature unit
Conversion Formulas
℉ = (℃ × 1.8)+32
℃ = (℉ -32) × 0.556

Conversion To Specific Gravity G

	Condition	Specific Gravity G
kg/Nm^3	0℃ 1013mmbar	÷1.293
kg/Nm^3	15℃ 1013mmbar	÷1.225

Gravity G.

Pressure Conversion Ratios

Pa	bar	kgf/cm^2	atm	mH2O	mHg	Lbf/in^2
1	1×10^{-5}	1.0197×10^{-5}	9.869×10^{-5}	1.0197×10^{-4}	7.501×10^{-5}	1.450×10^{-4}
1×10^{-5}	1	1.0197	9.869×10^{-1}	1.0197×10	7.501×10^{-1}	1.450×10
9.80665×10^{-4}	9.80665×10^{-1}	1	9.678×10^{-1}	1.0000×10	7.356×10^{-1}	1.422×10
1.01325×10^{-5}	1.01325	1.0332	1	1.033×10	7.60×10^{-1}	1.470×10
9.80665×10^{-2}	9.80665×10^{-2}	1.0000×10^{-1}	9.678×10^{-2}	1	7.355×10^{-2}	1.4222×10
1.3332×10^{-5}	1.3332	1.3595	1.3158	1.360×10	1	1.934×10
6.895×10^{-3}	6.895×10^{-2}	7.031×10^{-2}	6.805×10^{-2}	7.31×10^{-1}	5.171×10^{-2}	1

Torque Conversion Ratios

oz · in	Lb · in	Lb · ft	g · cm	kg · cm	kg · m	mN · m	cN · m	N · m
1	0.0625	0.005	72	0.072	0.0007	7.062	0.706	0.007
16	1	0.83	1152.1	10152	0.0115	113	11.3	0.113
192	12	1	13826	13.83	0.138	1356	135.6	1.356
0.014	0.0009	0.00007	1	0.001	0.00001	0.098	0.01	0.0001
13.89	0.868	0.072	1000	1	0.01	98.07	9.807	0.098
1389	86.8	7.233	100000	100	1	9807	980.7	9.807
0.142	0.009	0.0007	10.2	0.01	0.0001	1	0.1	0.001
14.16	0.088	0.007	102	0.102	0.001	10	1	0.01
141.6	8.851	0.738	10197	10.20	0.102	1000	100	1

GASKET MATERIALS & CONSTRUCTION

NAME	MAKERS					CROSS SECTION
	CRANE	JEIL	PILLAR	TOMBO	VALQUE	
Universal Asbestos Joint Sheet	890 891	5700S	5000	1100	1500	
Lip Type Enveloped Gasket	11-C	-	4430	9010A	7030	
Spiral Wound Gasket	911	1804	2200	1804	590	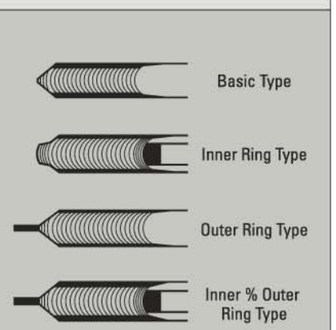
	-	3804-TF	2300	9090	7590	
	-	3804-SF	2600	1804GR	6590V	
Single Metal Jacketed Gasket	923	1840	1000	1840	520	
Double Metal Jacketed Gasket	-	1841	1004	1840	580	
Corrugated Gasket Soft iron	900	1870	1200	1880	500	
Serrated Gasket Metal	941	-	1300	1850-S	540	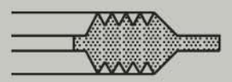
Octagonal Ring Joint Gasket	954	-	1500	1850-L	550SZ	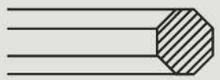
Oval Ring Joint Gasket	-	-	1501	1850V	550OZ	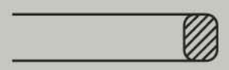

PERFORMANCE	CONTRUCTION & FEATURES	MAIN APPLICATIONS
TEMP : 930˚F(500˚C) PRESS : 500PSIG(35Kgf/cm²)	Compressed asbestos joint sheet made by using selected chrysotile asbestos as main material, adding a small amount of a synthetic rubber binder. For its high resilience, seal ability and good chemical resistance, it can be used for a wide range of fluids and apparatus.	Water, sea water, hot water, high pressure steam, air, acids, alkalis, aqueous salt solutions, animal and vegetable oils, alcohols, fuel oils, hydraulic fluids, lubricating oil, aliphatic solvents and their vapors, various gases and liquiefied gases.
TEMP : -150˚F ~ -300˚F (100˚C ~ 150˚C) PRESS : 285PSIG(20Kgf/cm²)	An enveloped type gasket mode by lancing a 1mm thick teflon disk and inserting a core inside.	Strong acids strong alkalis, oxygen, chlorine gas and organic solvents.
TEMP : 1,100˚F(600˚C) PRESS : 6,000PSIG(425Kgf/cm²)	A spiral wound gasket made by alternately winding the metal hoops formed to a V shape and the asbestos sheets subjected to impermeability treatment, Featuring excellent gas sealability, heat resistance and elasticity, this gasket is usable for a wide range of applications. **Standard Materials** ▪ HOOP ------ SUS304 ▪ Filler ------ Asbestos sheet ▪ Inner ring --- SPCC ▪ Outer ring --- SPCC	Water, steam, oils, oil gas, gases and solvents.
TEMP : 1,100˚F(600˚C) PRESS : 6,000PSIG(425Kgf/cm²)	This is and ontirely new type of spiral wound gasket using teflon soft tapes of 100% PTFE having high resilience and elasticity for the filler material. It has superior gas sealability, chemical resistance and other property advantages and is usable for virtually any kind of fluids. **Standard Materials** ▪ HOOP ------ SUS304 ▪ Filler ------ Soft teflon ▪ Inner ring --- SUS304 ▪ Outer ring --- SUS304	General chemicals, corrosive fluids, gases and dangerous fluids.
TEMP : 1,600˚F(870˚C) PRESS : 6,000PSIG(425Kgf/cm²)	A spiral wound gasket using grafoil tapes for filler material, and featuring excellent gas sealability, heat resistance and chemical resistance. This provides the highest level of performances among all the existing gaskets. **Standard Materials** ▪ HOOP ------ SUS304 ▪ Filler ------ Grafoil Tapes ▪ Inner ring --- SPCC ▪ Outer ring --- SPCC	Steam of high temperatures and high pressures, dangerous gases. He, gas , ammonia and LNG.
Depends on metal materials	Flat-shaped metallic gasket with an asbestos mill board is jacketed with a single ply of metal sheet.	Steam of high temperatures and high pressures, gases, oil gas, solvent vapors, pipe flange, solvent vapors, and covers of pressure vessels.
Depends on metal materials	Flat-shaped metallic gasket made by jacketing an asbestos mill board with a metal sheet in double.	Pipe flanges and heat exchangers of petroleum refining industry and petrochemical industry.
Depends on metal materials	Metallic gasket made by fabricating a metal sheet to concentrical waveforms to enable more contact face pressure to be taken, and adding the spring effect of improve sealability.	Bonnets of various valves forsteam of high temperatures and low pressures, oil, gas, solvent vapors and heat medium oil.
Depends on metal materials	Metallic gasket made by machining concentrical sharp V-grooves of 60 or 90 to a flat metal gasket at roughly 1mm pitch.	Pipe flanges and valve bonnets for steam of high temperatures and high pressures, and gases.
Depends on metal materials	Metallic ring joint by machining various metal materials to an octagonal shape.	High-temperature high-pressure pipe flanges, valve bonnets and heat exchangers.
Depends on metal materials	Metallic ring joint gasket made by machining various metal materials into an oval Section.	High-temperature high-pressure pipe flanges, valve bonnets and heat exchangers.

PACKING MATERIAL & CONSTRUCTION

MAKERS							PERFORMANCE	CONSTRUCTION & FEATURES	MAIN APPLICATIONS
CRANE	GARLOCK	JEIL	PILLAR	TBA	TOMBO	VALQUE			
814 815	234	2130	114	20	3506	132	TEMP : 660˚F(350˚C) PRESS : 570PSIG(40Kgf/cm²)	General-purpose economical packing, made by braiding the outside circumference of a plastic core, braid over braid, and treating the surface with graphite.	Water, saturated steam, general-purpose valves.
187	127N	2605	315	-	2921	1272	TEMP : 1200˚F(650˚C) PRESS : 6000PSIG(425Kgf/cm²)	A packing for valves made by double braiding the outside circumference of a plastic core, braid, with the finest-quality asbestos yarn reinforced with monel wires and backing graphite to the surface. Featuring good sealing properties, small torque and ease of replacement at the repair, this packing is used as a standard packing for steam service.	Saturated steam, hot oils, petroleum-base hydrocarbons valves, cocks, and soot blowers.
1066	127	2405	316	FPM500	2920	1273	TEMP : 1200˚F(650˚C) PRESS : 6000PSIG(425Kgf/cm²)	Made by double braiding the outside circumference of the core made by blending and molding high-eased asbestos and a heat-resistant antifriction compound, with finest-quality asbestos yarn reinforced with inconel wires, braid over braid, and backing graphite to the surface.	Saturated steam, hot oils, petroleum base hydrocarbons, solvents, gas, ammonia, valves, cocks.
C-58	5234	3031	4513S	23L	9075	7136	TEMP : -150˚F ~ -500˚F (100˚C ~ 260˚C) PRESS : 1420PSIG(100Kgf/cm²)	Made by impregnating asbestos yarn with PTFE dispersion and lubricant, square-braiding the core and braiding the outside circumference, braid over braid.	Water, solvents, acids and alkalis.
-	5861	3036	4533	23D	9075P	-	TEMP : -330˚F ~ -500˚F (200˚C ~ 260˚C) PRESS : 2840PSIG(200Kgf/cm²)	Made by impregnating premium-quality asbestos with PTFE dispersion and lattice-braiding the yarn to the densiest construction.	Solvents, acids, alkalis, oxygen and LNG.
C1050	5889	3064	4505	26L	9034	7233	TEMP : -150˚F ~ -500˚F (100˚C ~ 260˚C) PRESS : 1420PSIG(100Kgf/cm²)	Square-braiding Teflon(P.T.F.E) fibers packing, impregnated with P.T.F.E and lubricant. It features good chemical and solvent resistances, good sealability lack of shaft abrasion, and low operating torque.	Solvents, strong acids, strong alkalis, fluids which does not allow pollution.
C1045	5888	3063	4525	26D	9033	7232	TEMP : -330˚F ~ -500˚F (-200˚C ~ 260˚C) PRESS : 2840PSIG(200Kgf/cm²)	Lattice-braiding Pure Teflon(P.T.F.E) fibers packing to the highest density and impregnating the fibers with P.T.F.E dispersion.	Solvents, strong acids, strong alkalis, and fluids which does not allow pollution.
-	-	-	6610	-	-	-	PH : 0 To 14 TEMP : -270˚F To 600˚C (100˚C ~ 260˚C) PRESS : 43.1MPa(440Kgf/cm²) (ANSI class 2500)	Pure graphite preformed, one cut type packing. It is superior for heat, chemical and radiation resistance. The combination use with Style 6710 is recommended. Recommendation for nuclear power station : Style 6610N	Water, steam, oil, heat transfer oil, solvent, gas, LNG, strong acid, strong alkali, high pressure & high temperature valves, cryogenic valves, high pressure gas valves.
1630G	98	-	6528	-	-	-	TEMP : 1200˚F(650˚C) PRESS : 2500PSIG(175Kgf/cm²)	This award-winning, carbon fiber packing is a favorite in many applications. Long life, low coefficient of friction and high thermal conductivity plus fast start-up time are featured, along with high chemical resistance.	Oil drilling and down-hole tools, handles acids, strong casustics, hot oils, solvents, and boiler feed.

COMPARISON ASTM. KS & JIS

MATERIAL CLASSI-FICATION	Material			Chemical Composition									Tensile Requirements			
	ASTM	KS	JIS	C	Si	Mn	P	S	Ni	Cr	Mo	Other requirements	Tensile Strength min kgf/mm²	Yield Strength min kgf/mm²	Elonga-tion min %	Reduc-tion of Area min %
Cast Steel & Cast Iron	A-216 - WCB			≤0.30	≤0.60	≤1.00	≤0.040	≤0.045	≤0.50	≤0.40	≤0.25	V≤0.30, Cu≤0.30	49–67	25	22	35
		SCPH2	SCPH2	≤0.30	≤0.60	≤1.00	≤0.040	≤0.040	≤0.50	≤0.25	≤0.25	Cu≤0.50	49	25	19	35
	A-216 -CLB						≤0.75	≤0.15					22			
		GC200	FC200										20			
	A-536-60-40-18												42	28	18	
		GCD400	FCD400										40	26	15	
	A-197-40-30-5												28	21	5	
		BMC28	FCMB28										28	17	5	
Bolt & Nut	A-307-B						≤0.04	≤0.05					70		18	
		SB50	SS50				≤0.05	≤0.05					50–62			
		SB41	SS41				≤0.05	≤0.05					41–52			
	A-193-B7			0.38–0.48	0.20–0.35	0.75–1.00	≤0.04	≤0.04		0.80–1.10	0.15–0.25		88	74	16	50
		SNB7	SNB7	0.36–0.50	0.18–0.37	0.71–1.04	≤0.045	≤0.045		0.75–1.15	0.13–0.27		88	74	16	50
		SCM3	SCM3	0.33–0.38	0.15–0.35	0.60–0.85	≤0.030	≤0.030		0.90–1.20	0.15–0.30		95	80	15	50
	A-194-2H			≥0.40			≤0.040	≤0.050								
		SM45C	S45C	0.42–0.48	0.15–0.35	0.60–0.90	≤0.030	≤0.035					58	35	20	
				Cu	Al	Pb	Zn	Fe	Sn	Mn	Si					
Copper & Copper Alloy	B584 N865			55.0–60.0	0.5–1.50	≤0.40	36.0–42.0	0.40–2.0	≤1.00	0.1–1.5		Ni ≤ 1.00	46	18	20	
		HBsC2	HBsC2	55.0–60.0	0.5–2.0	≤0.40	Remainder	0.50–2.0	≤1.00	≤0.1	≤0.1	Ni ≤ 1.00	50		18	
	B16 NO360			60.0–63.0		2.5–3.7	*	≤0.35				Other Than Cu, Pb, Zn, Fe≤0.5	31	13	20	
		MBsBE2	BsBM2	56.5–61.5		1.5–3.7	*	≤0.80				(Fe+Sn≤1.8)				
	B124 NO377			58.0–62.0		1.5–2.5	*	≤0.30				Total other Element Max 0.50				
		FBsBE2	BsBF2	57.0–61.0		0.5–2.5	*					(Fe+Sn≤1.5)	32		15	

COMPARISON ASTM. KS & JIS

MATERIAL CLASSI-FICATION	Material			Chemical Composition									Tensile Requirements			
	ASTM	KS	JIS	C	Si	Mn	P	S	Ni	Cr	Mo	Other requirements	Tensile Strength min kgf/mm²	Yield Strength min kgf/mm²	Elonga-tion min %	Reduc-tion of Area min %
Stainless Steel (Casting)	A-351-CF8			≤0.08	≤2.00	≤1.50	≤0.04	≤0.04	8.0–11.0	18.0–21.0			49	21	35	
		SSC13	SCS13	≤0.080	≤2.00	≤2.00	≤0.04	≤0.04	8.0–11.0	18.0–21.0			45	19	30	
	A-351-CF3M			≤0.03	≤1.50	≤1.50	≤0.04	≤0.04	9.0–13.0	17.0–21.0	2.0–3.0		49	21	30	
		SSC16	SCS16	≤0.03	≤1.50	≤2.00	≤0.04	≤0.04	12.0–16.0	20.0–21.0	2.0–3.0		40	18	33	
	A-351-CF8M			≤0.08	≤1.50	≤1.50	≤0.04	≤0.04	9.0–12.0	18.0–21.0	2.0–3.0		49	21	30	
		SSC14	SCS14	≤0.08	≤2.00	≤2.00	≤0.04	≤0.04	10.0–14.0	17.0–20.0	2.0–3.0		45	19	28	
	A-351-CF3			≤0.03	≤2.00	≤1.50	≤0.04	≤0.04	8.0–12.0	17.0–21.0			49	21	35	
		SSC19	SCS19	≤0.03	≤2.00	≤2.00	≤0.04	≤0.04	8.0–12.0	17.0–21.0			40	19	33	
	A-351 CG3M			≤0.03	≤1.50	≤1.50	≤0.04	≤0.04	9.0–13.0	18.0–21.0	3.0–4.0		52.5	24.5	25	
Stainless Steel (Bar & Plate)	A-276-304			≤0.08	≤1.00	≤2.00	≤0.045	≤0.03	8.0–10.50	18.0–20.0			21	53	40	50
		STS304	SUS304	≤0.08	≤1.00	≤2.50	≤0.045	≤0.03	8.0–10.50	18.0–20.0			21	53	40	60
	A-276-316			≤0.08	≤1.00	≤2.00	≤0.045	≤0.03	10.0–14.0	16.0–18.0	2.0–3.0		21	53	40	50
		STS316	SUS316	≤0.08	≤1.00	≤2.00	≤0.045	≤0.03	10.0–14.0	16.0–18.0	2.0–3.0		21	53	40	60
	A-276-316L			≤0.03	≤1.00	≤2.00	≤0.045	≤0.03	10.0–14.0	16.0–18.0	2.0–3.0		21	53	40	60
		STS316 L	SUS316 L	≤0.03	≤1.00	≤2.00	≤0.045	≤0.03	10.0–150	16.0–18.0	2.0–3.0		18	49	40	60
		STS317 L	SUS317 L	≤0.03	≤1.00	≤2.00	≤0.045	≤0.03	12.0–15.0	18.0–20.0	3.0–4.0		18	49	40	60
	AP276-403			≤0.15	≤0.50	≤1.00	≤0.04	≤0.03	11.0–15.0	11.50–13.0			70	56	12	40
		STS403	SUS403	≤0.15	≤0.50	≤1.00	≤0.04	≤0.03		11.50–13.0			40	60	25	55
	A-276-410			≤0.15	≤1.00	≤1.00	≤0.04	≤0.03		11.50–13.50			56	70	15	45
		STS410	SUS410	≤0.15	≤1.00	≤1.00	≤0.04	≤0.03		11.50–13.50			35	55	25	55
	A-276-420			≤0.15	≤1.00	≤1.00	≤0.04	≤0.03		12.0–14.0			-	-	-	-
		STS420 J2	SUS420 J2	0.26–0.40	≤1.00	≤1.00	≤0.04	≤0.03		12.00–14.00			55	75	12	40